Wood Insert Owner's Manual

Part 2 of 2

INSTALLATION AND OPERATION REQUIREMENTS

ESCAPE 1800-I

(DB03125, DB03127K and DB03128K models)

ENGLISH

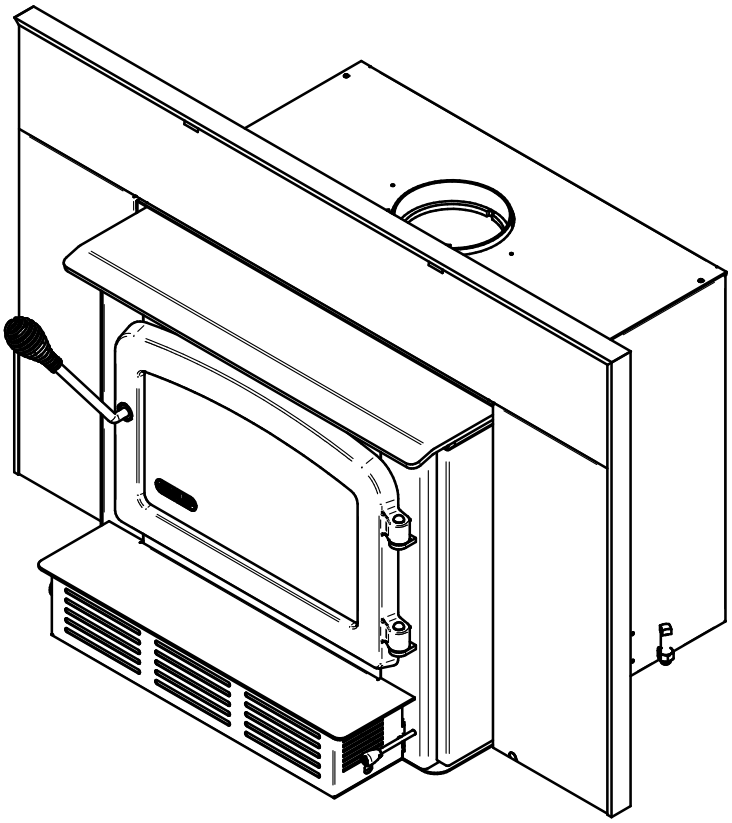

Safety tested according to ULC 628, UL 1482 and UL 737 by an accredited laboratory.

US Environmental Protection Agency phase II certified wood insert compliant with 2020 cord wood standard.

EPA ≤2.5 g/h

CONTACT LOCAL BUILDING OR FIRE OFFICIALS ABOUT RESTRICTIONS AND INSTALLATION INSPECTION REQUIREMENTS IN THE AREA.

READ THIS ENTIRE MANUAL BEFORE INSTALLATION AND USE OF THIS WOOD INSERT. FAILURE TO FOLLOW THESE INSTRUCTIONS COULD RESULT IN PROPERTY DAMAGE, BODILY INJURY OR EVEN DEATH.

READ AND KEEP THIS MANUAL FOR REFERENCE

2024-02-28

Printed in Canada

45931_IA

ONLINE WARRANTY REGISTRATION

If the unit requires repairs during the warranty period, proof of purchase must be provided. The purchase invoice must be kept. The date indicated on it establishes the warranty period. If it can not be provided, the warranty period will be determined by the date of manufacture of the product. It is also highly recommended to register the warranty online at

https://www.drolet.ca/ca/en/warranty-registration/

Registering the warranty will help to quickly find the information needed on the unit.

Dealer: _____

_____

Installer: _____

_____

Phone Number: _____

Serial Number: _____

TABLE OF CONTENTS

1. Certification Plate 4

2. General Information 5

2.1 Performances 5
2.2 Specifications 6
2.3 Dimensions 7
2.4 EPA Loading Procedure 9

3. Clearances to Combustible Material 13

3.1 Minimum Masonry Opening and Clearances to Combustibles 13
3.2 Floor Protection 14
3.3 R Value 15

4. Installing Options on Your Product and Replacing Parts 17

4.1 Replacement and Adjustment 17
4.2 Mandatory Installation 21
4.3 Blower and Ash Lip Installation 22
4.4 Installation and setting of the leveling system 23
4.5 Optional Cuttable Faceplate Installation 24
4.6 Log Retainers Installation 25
4.7 Optional Faceplate And Trims Installation 26
4.8 Optional Fresh Air Intake Kit Installation 30
4.9 Optional Fire Screen Installation 31
4.10 Air Tubes and Baffle Installation 32
4.11 Removal Instructions 35
4.12 Exploded Diagram and Parts List 36

DROLET LIMITED LIFETIME WARRANTY 39

ENGLISH

1. Certification Plate

REFER TO INTERTEK'S DIRECTORY OF BUILDING PRODUCTS FOR DETAILED INFORMATION
SE RÉFÉRER AU RÉPERTOIRE DES PRODUITS HOMOLOGUÉS D'INTERTEK POUR PLUS D'INFORMATION

C ETL LISTED US

Intertek

Control number: 4002461
(March/Mars 2018)

STANDARDS / NORMES D'ESSAI:

Certified to / Certifié selon ULC S628
Certified to / Certifié selon UL 1482
Certified to / Certifié selon UL 737
Certified to/Certifié selon CSA B415.1
Certified to/Certifié selon ASTM E3053
Certified to/Certifié selon ASTM E2515

LISTED SOLID FUEL BURNING INSERT APPLIANCE

APPAREIL ENCASTRABLE À COMBUSTIBLE SOLIDE HOMOLOGUÉ

MODEL / MODÈLE :

ESCAPE 1800-I

Serial Number
No. de Série: 999998

Clearances to combustibles / Dégagements aux combustibles

Measured from insert body

Mesuré à partir de la chemise de l'encastrable

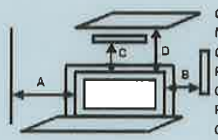

Combustible side wall
Mur côté adjacent

Combustible side surround [1]
Parement latéral combustible [1]

Combustible top surround [1]
Parement supérieur combustible [1]

Combustible mantle shelf [1]
Tablette combustible [1]

A: 16 in./po. (406 mm)
B: 9 in./po. (229 mm)
C: 27 in./po. (686 mm)
D: 27 in./po. (686 mm)

Floor protection
Protection de plancher

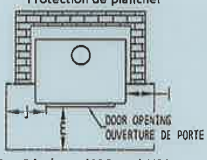

E: 16 in./po. (406 mm) USA
18 in./po. (457 mm) CANADA
I: 8 in./po. (203 mm) CANADA
J: 8 in./po. (203 mm) USA

Blower / Ventilateur:
115VOLTS, 0.8 AMPS, 60Hz

[1] Subject to a maximum protrusion (consult owner's manual) / Sujet à une saillie maximale (consultez le manuel d'instructions)

PREVENT HOUSE FIRES

- Install and use only in accordance with the manufacturer's installation and operating instructions.
- Contact local building or fire officials about restrictions and installation inspection in your area.
- Use with solid wood fuel only. Do not use other fuels.
- Risk of smoke and flame spillage. Operate only with door closed or door open with screen door installed. Open door or remove screen door only to feed the stove.
- Do not connect this unit to a chimney serving another appliance.
- Install only in masonry fireplaces. Do not remove bricks or mortar from masonry fireplace.
- This stove must be installed as a freestanding heater with the clearances listed in the manufacturer's installation instructions. It is strictly forbidden to install this stove in a factory-built fireplace.
- The non-combustible floor protection in front of the unit should have an R value equal or greater than 1.00 extending 23 inches (584 mm) in front of the insert if the hearth elevation is lower than 5 inches (127 mm) or extend 16 inches (406 mm) (USA), 18 inches (457 mm) (CANADA) without a R value if the hearth elevation is higher than 5 inches (127 mm).
- Connect to a code-approved masonry chimney or listed factory-built fireplace chimney with a direct flue connector into the first chimney liner section.
- Do not overfire. If stove or chimney connector glows, your are overfiring.
- Inspect and clean chimney frequently. Under certain conditions of use, creosote buildup may occur rapidly.
- Do not use grate or elevate fire. Build wood fire directly on hearth.
- Replace glass only with ceramic glass.
- This wood heater needs periodic inspection and repair for proper operation. Consult the owner's manual for further information. It is against US federal regulations to operate this wood heater in a manner inconsistent with the operating instructions in the owner's manual.

PRÉVENEZ LES INCENDIES

- Installer et utiliser conformément au manuel d'utilisation du fabricant.
- Contacter les autorités de votre localité ayant juridiction concernant les restrictions et inspections d'installation.
- Utiliser avec le bois seulement. Ne pas utiliser d'autres combustibles.
- Risque de fuite de fumée et de flammes. Utiliser l'appareil la porte fermée ou ouverte avec le pare-étincelle en place uniquement. Ouvrir la porte ou retirer le pare-étincelle seulement lors du chargement.
- Ne pas raccorder à un conduit de fumée servant déjà pour un autre appareil.
- Installer seulement dans un foyer de maçonnerie. Ne pas enlever les briques ou le mortier du foyer de maçonnerie.
- Ce poêle doit être installé comme appareil de chauffage autonome avec les dégagements indiqués dans les instructions d'installation du fabricant. Il est strictement défendu d'installer ce poêle dans un foyer préfabriqué.
- La protection de plancher incombustible au devant de l'encastrable devrait avoir un facteur d'isolation R égal ou supérieure à 1.00 et se prolonger 23 pouces (584 mm) au devant de l'appareil lorsque l'âtre possède moins de 5 pouces (127 mm) d'élévation et se prolonger 16 pouces (406 mm) (USA), 18 pouces (457 mm) (CANADA), sans facteur d'isolation R au devant de l'encastrable lorsque l'âtre possède plus de 5 pouces (127 mm) d'élévation.
- Raccorder à une cheminée de maçonnerie respectant les codes ou à une cheminée préfabriquée homologuée, directement à la première section de cheminée gainée.
- Ne pas surchauffer. Si l'appareil ou le tuyau rougit, il y a surchauffe.
- Inspecter et nettoyer la cheminée fréquemment. Dans certaines conditions, la formation de créosote peut être rapide.
- Ne pas utiliser de chenets ou de grilles pour élever le feu. Préparer le feu directement sur l'âtre.
- Remplacer la vitre avec un verre de céramique.
- Cet appareil de chauffage requiert des inspections et réparations périodiques. Consulter le manuel de l'utilisateur pour plus d'information. Opérer cet appareil de chauffage de façon inconsistente par rapport au manuel de l'utilisateur consiste une violation de la loi fédérale (USA).

U.S. ENVIRONMENTAL PROTECTION AGENCY Certified to comply with 2020 particulate emission standards using cordwood.
AGENCE DE PROTECTION DE L'ENVIRONNEMENT DES É.-U. Conforme aux normes d'émission de particules de 2020 avec bûche de bois.
Weighted average emission rate: / Moyenne pondérée des émissions: 2.3 g/h
Tested and certified in compliance with CFR 40 part 60, subpart AAA, section 60.534(a)(1(ii))

WARNING: This product can expose you to carbon monoxide, which is known to the State of California to cause cancer, birth defects or other reproductive harm. (For more information go to www.p65warnings.ca.gov)

CAUTION

- HOT WHILE IN OPERATION.
- DO NOT TOUCH. KEEP CHILDREN, CLOTHING AND FURNITURE AWAY.
- CONTACT MAY CAUSE SKIN BURNS. SEE NAME-PLATE AND INSTRUCTIONS.

ATTENTION

- CHAUD EN FONCTIONNEMENT.
- NE PAS TOUCHER. GARDER LES ENFANTS, LES VÊTEMENTS ET LES MEUBLES ÉLOIGNÉS.
- UN CONTACT AVEC LA PEAU PEUT OCCASIONNER DES BRÛLURES. VOIR LES INSTRUCTIONS.

R27723

Made in St-Augustin-de-Desmaures (Qc), Canada
05/10/2022 (# Test)

SBI
Fabricant de poêles international
Stove Builder International

Fabriqué à St-Augustin-de-Desmaures (Qc), Canada
05/10/2022 (# Test)

ENGLISH

2. General Information

2.1 Performances

Values are as measured per test method, except for the recommended heating area, firebox volume, maximum burn time and maximum heat output.

Model	Escape 1800-I (DB03125,DB03127K and DB03128K)	
Type of combustion	Non-catalytic	
Fuel Type	Dry Cordwood	
Recommended heating area (sq. ft.)[1]	500 to 2,100 ft^2 (47 to 195 m^2)	
Overall firebox volume[2]	2.4 ft^3 (0.068 m^3)	
EPA loading volume	1.65 ft^3 (0.055 m^3)	
Maximum burn time[1]	8 hours	
Maximum heat output (dry cordwood)[3]	75,000 BTU/h (22.0 kW)	
Overall heat output rate (min. to max.)[2 4]	14,200 BTU/h to 44,500 BTU/h (4.16 kW to 13.04 kW)	
Average overall efficiency[3] (Dry cordwood)	72 % (HHV)[5]	77 % (LHV)[6]
Optimum overall efficiency[7]	79 %	
Optimum heat transfer efficiency[8]	76 %	
Average particulate emissions rate[9]	2.3 g/h (EPA / CSA B415.1-10)[10]	
Average CO[11]	69 g/h	

ENGLISH

[1] Recommended heating area and maximum burn time may vary subject to location in home, chimney draft,heat loss factors, climate, fuel type and other variables. The recommended heated area for a given appliance is defined by the manufacturer as its capacity to maintain a minimum acceptable temperature in the designated area in case of a power failure.
[2] The overall firebox calculation is an approximation and is not intended to be used for loading. This volume includes a buffer zone to allow an easier fuel insertion, prevent ash spillage and allow the air wash to work properly.
[3] The maximum heat output (dry cordwood) is based on a loading density varying between 15 lb/ft^3 and 20 lb/ft^3. Other performances are based on a fuel load prescribed by the standard. The specified loading density varies between 7 lb/ft^3 and 12 lb/ft^3. The moisture content is between 19% and 25%.
[4] As measured per CSA B415.1-10 stack loss method.
[5] Higher Heating Value of the fuel.
[6] Lower Heating Value of the fuel.
[7] Optimum overall efficiency at a specific burn rate (LHV).
[8] The optimum heat transfer efficiency is for the low burn rate and represents the appliance's ability to convert the energy contained in the wood logs into energy transferred to the room in the form of heat and does not take into account the chemical losses during combustion.
[9] This appliance is officially tested and certified by an independent agency.
[10] Tested and certified in compliance with CFR 40 part 60, subpart AAA, section 60.534(a)(1(ii) and ASTM E3053-17. Based on ALT-125 sent by EPA on February 28th, 2018..
[11] Carbon monoxide.

2.2 Specifications

Recommended log length	16 in (406 mm) east-west
Maximum log length[1]	20 in (508 mm) east-west
Flue outlet diameter	6 in (150 mm)
Recommended connector pipe diameter	6 in (150 mm)
Type of chimney	ULC S635, CAN/ULC-S640, UL 1777
Minimum liner height	12 feet
Baffle material	Vermiculite
Approved for alcove installation	Not approved
Approved for mobile home installation[2]	Not approved
Type of door	Single, glass with cast iron frame
Type of glass	Ceramic glass
Blower	Included (up to 144 CFM)
Particulate emission standard[3]	EPA / CSA B415.1-10
USA Standard (Safety)	UL 1482, UL 737
Canada Standard (Safety)	ULC 628

ENGLISH

[1] North-south: ends of the logs visible, East-west: sides of the logs visible.

[2] Mobile homes (Canada) or manufactured homes (USA): The US Department of Housing and Urban Development describes “manufactured homes” better known as “mobile homes” as follows; buildings built on fixed wheels and those transported on temporary wheels/axles and set on a permanent foundation. In Canada, a mobile home is a dwelling for which the manufacture and assembly of each component is completed or substantially completed prior to being moved to a site for installation on a foundation and connection to service facilities and which conforms to the CAN/CSAZ240 MH standard.

[3] Tested and certified in compliance with CFR 40 part 60, subpart AAA, section 60.534(a)(1(ii) and ASTM E3053-17. Based on ALT-125 sent by EPA on February 28th, 2018.

2.3 Dimensions

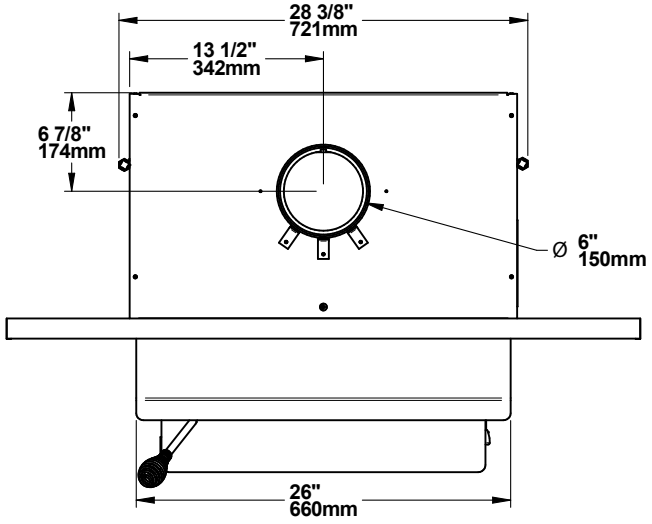

Figure 1 : Top View

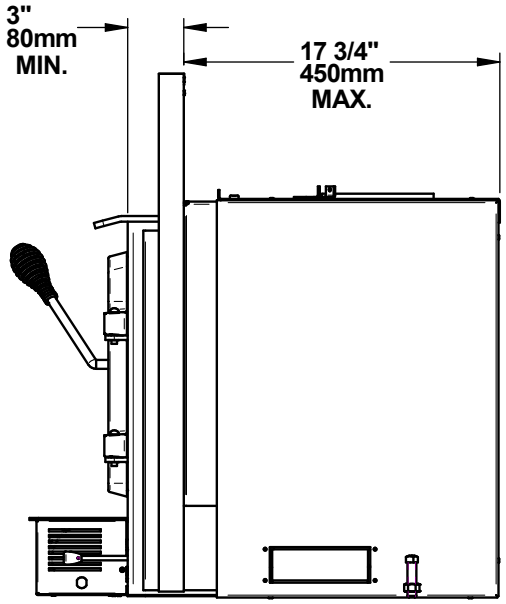

Figure 2 : Side View - Minimum Insert Projection

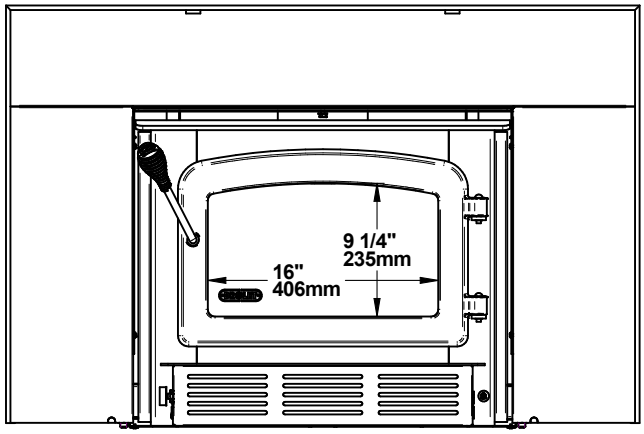

Figure 3 : Front View

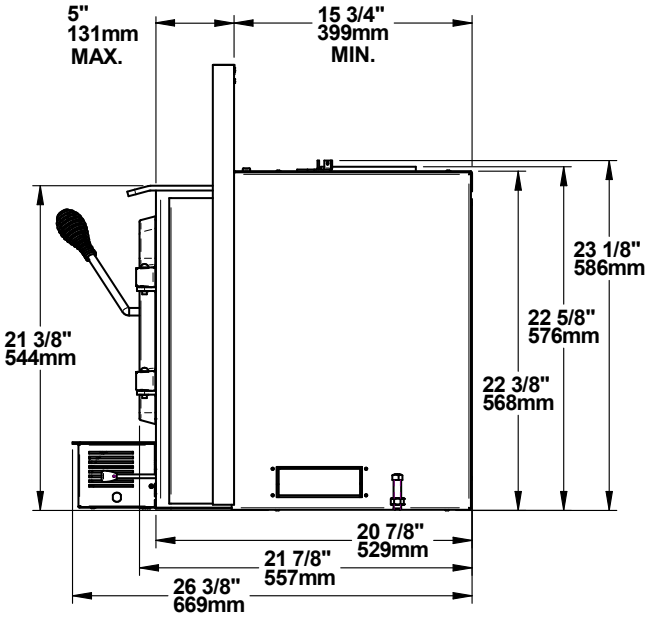

Figure 4 : Side View - Maximum Insert Projection

ENGLISH

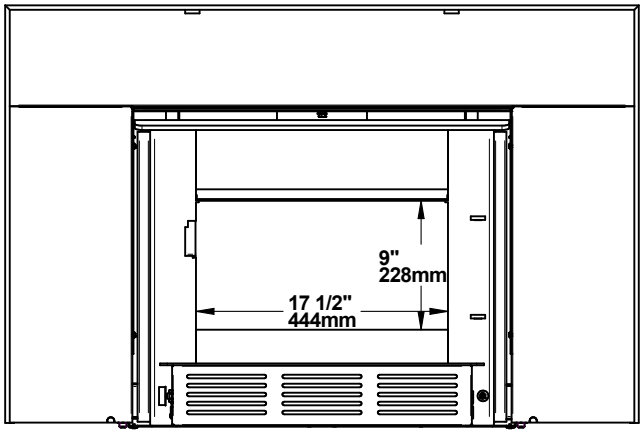

Figure 5 : Door Opening

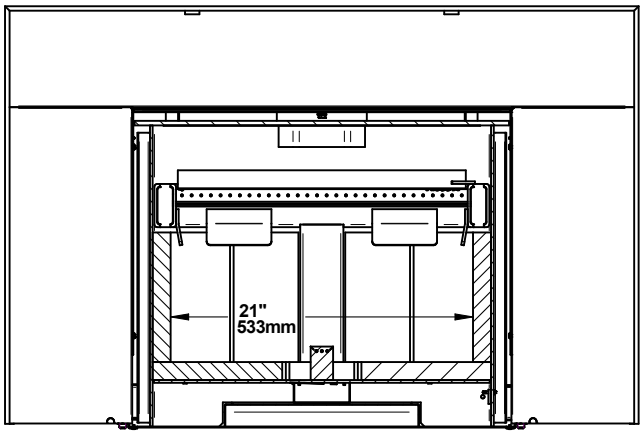

SECTION B-B

Figure 6 : Front View - Combustion Chamber

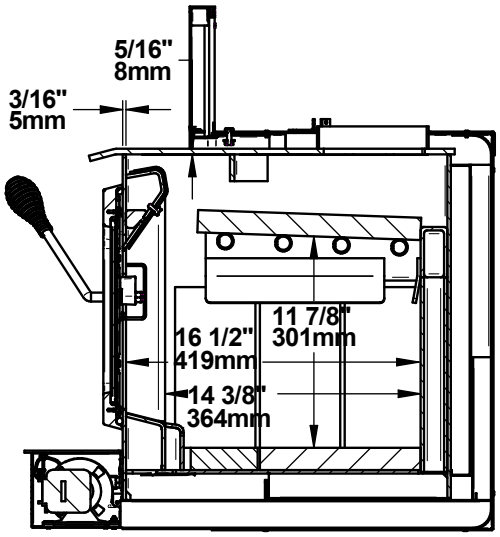

SECTION A-A

Figure 7 : Side View - Combustion Chamber

2.4 EPA Loading Procedure

The best loading method for efficient and clean combustion with this fireplace is the EPA loading method. The images below show the space in the firebox where the logs are to be placed. It is important to always respect this space and not to put logs in the grid area marked with an X. The marked area is defined by the space between the glass and primary air channel. Leave enough space between the logs for good air circulation. Using more than the usable firebox volume for loading wood will result in poor combustion. The Usable firebox volume of 1.95 ft^3 shown below is the one used during EPA emissions certification. The log length recommended for this stove is 16 inches and the EPA testing were done with log length of 16 in. The fuel specie used for the EPA certification was beech.

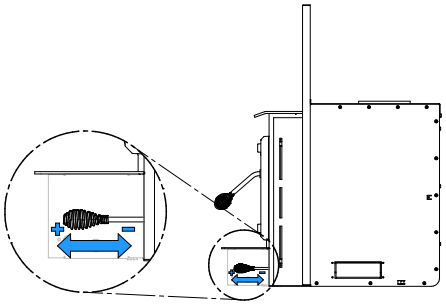

2.4.1 Air control

The air control is located underneath the ash shelf. To open the air control, pull the air control handle completely (High). This will increase the burn rate. To close the air control, push the air control handle completely. This will permit to achieve the lowest possible burn rate.

ENGLISH

2.4.2 High burn rate (primary air control open)

For Kindling and Start-up fuel configuration refer to the pictures below. Split the start-up fuel log into 8 pieces. Crisscross at 45 degrees the 8 pieces on the brick on 2 rows and leaving some space between each wood pieces. Crisscross at 45 degrees the kindling on the top of the start-up fuel on 3 rows, from biggest to smallest. The kindling is made of between 10-16 small pieces that are about 10% of moisture content. Place 5 newspaper sheets on top of the kindling. Light up the paper and let the door at 90 degrees between one minute and one minute and 30 seconds, then close the door. Air control is fully open.

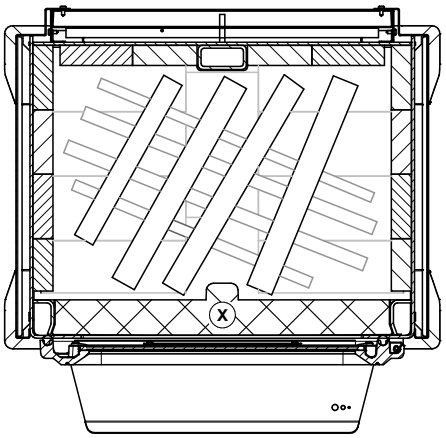

Figure 8: Start-up fuel

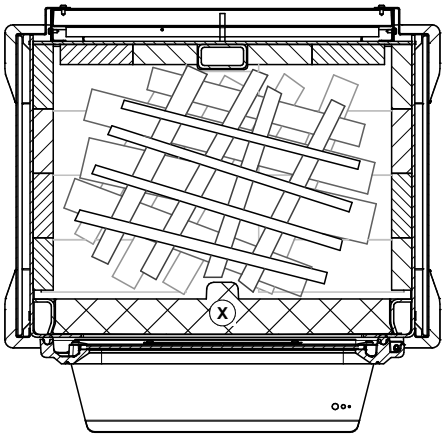

Figure 9: Kindling

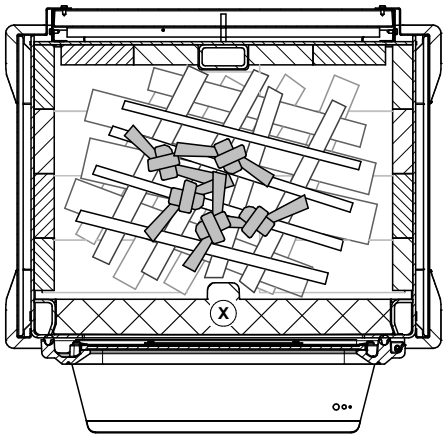

Figure 10: Newspaper

When there are only faint flames remaining and most of the wood is turned into coal, break ashes and level coal bed. Close the door.

Add High Fire load in an East-West configuration. Put 3 first pieces on the coal bed without air space between them. Leave about 1 inch of air space between the rear firebrick and the first piece. See Figure 11 and 12 for an example of high burn load inside the firebox. The front (3rd) piece should stand off on the steel andirons by approximately 1-2 inches. The 2 other pieces

should be added on top of the first 3, stacked in the middle, in an East-West orientation. Let the door open at 90 degrees between one minute and one minute and 30 seconds. Close the door, start the blower at maximum speed, and let burn until the weight is down to target.

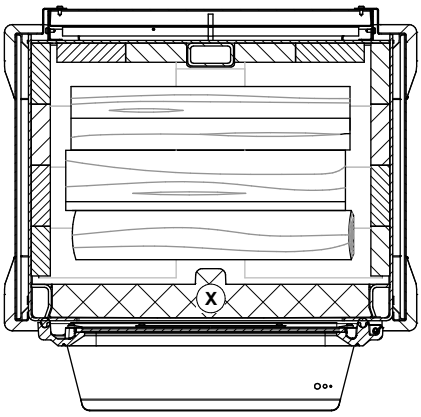

Figure 11: Position of the bottom pieces (High burn)

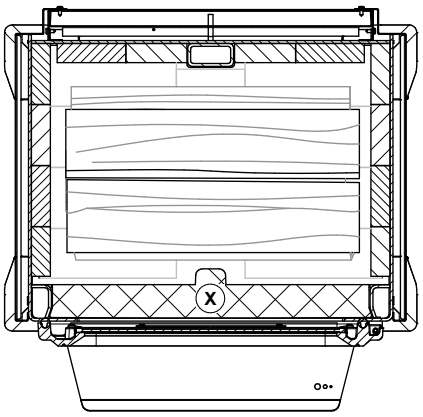

Figure 12: Position of the two top pieces (High burn)

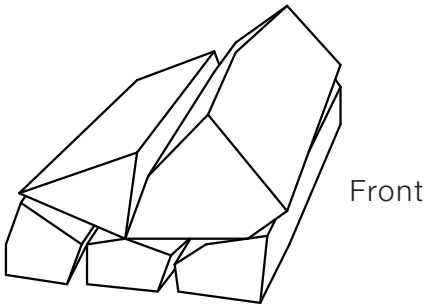

Figure 13: Example high burn load (side view)

ENGLISH

For optimal loading of a high fire, take small to medium size fuel pieces (between 2- and 3-inches cross section dimensions approximately) on the bottom and use medium to large size fuel pieces (3.5 to 4.5 inches of cross section dimensions approximately) on top. To make sure combustion is equal, put the biggest piece on top of the first three, at the front of the firebox. See an example of high burn load in the Figure 13 above.

2.4.3 Low burn rate

After the high fire, if there is visible yellow flame, close the air control. When the charcoal bed weight is between 14 and 17% of the low fire load weight, turn off the blower, open the door, stir the coals slightly, just enough to have a level plane coal bed, and let the door remain slightly open for 1 minute before loading the low burn test fuel.

For the loading, put 3 first pieces on the coal bed in an East-West orientation. Leave approximately 1 inch to 2 inches of air space between the rear firebrick and the first piece. There should be air space between all pieces. The front (3rd) piece may contact the steel andirons. The 2 top pieces (fourth and fifth) should be added on top of the first 3, slightly angled (20° from the 3 wood pieces at the bottom). The distance between the logs should be approximately 1 inch. See Figure 14 and 15 for an example of low burn load inside the firebox.

For optimal low fire load, use medium to large size fuel pieces (between 4- and 5.5-inches cross section dimensions approximately) on the bottom and use small to medium size fuel pieces (2.5 to 4 inches cross section dimensions approximately) on top. To make sure combustion is equal, put the smallest piece on top of the first three, at the back of the firebox (see Figure 16 for an example of low burn load).

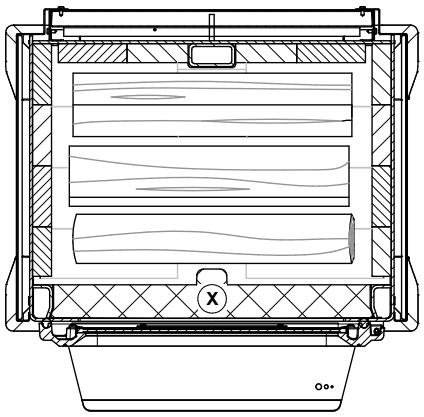

Figure 14: Position of the bottom pieces (Low burn)

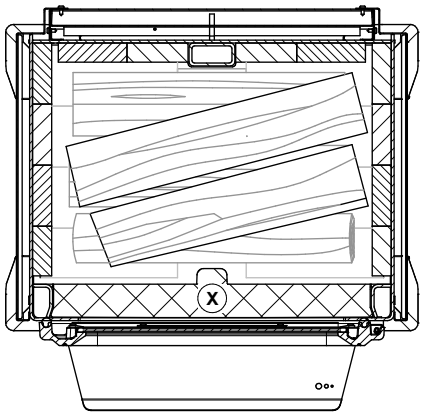

Figure 15: Position of the two top pieces (Low burn)

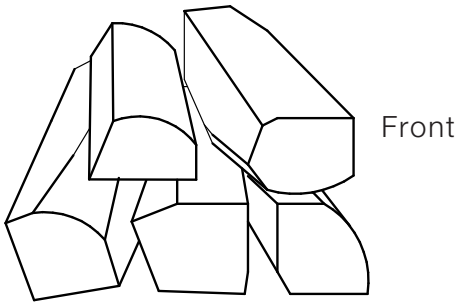

Figure 16: Example low burn load (side view)

Let the door ajar at 90° until the flames roll on top of the fuel (between 2:00 and 4:00 minutes) and then close the door with the primary air control open. See picture below for rolling flame:

Close the primary air control by small increments (ex: 1/16 of an inch), from ½" to fully closed, between 4 and 15 minutes after the loading period. Before closing further, make sure the flame intensity is increasing or stable. Close the air control completely. Turn ON the blower at maximum speed.

2.4.4 Medium burn rate

After the high fire, if there is visible yellow flame, close the air control. When the charcoal bed After the high fire, if there is visible yellow flame, close the air control. When the charcoal bed weight is between 14 and 17% of the medium fire load weight, turn off the blower, open the door, stir the coals slightly, just enough to have a level plane coal bed, and let the door remain slightly open for 1 minute before loading the medium burn test fuel.

For the loading, put 3 first pieces on the coal bed in an East-West orientation. Leave about 1 to 2 inches of air space between the rear firebrick and the first piece. The front (3rd) piece may contact the steel andirons. The 2 top pieces (fourth and fifth) should be added on top of the first 3, slightly angled (20° from horizontal, top view). The distance between the logs should be approximately 1 inch. See Figure 17 and 18 for an example of medium burn load inside the firebox.

For optimal medium fire load, use medium to large size fuel pieces (between 4- and 5.5-inches cross section dimensions approximately) on the bottom and use small to medium size fuel pieces

ENGLISH

(2.5 to 4 inches cross section dimensions approximately) on top. To make sure combustion is equal, put the smallest piece on top of the first three, at the back of the firebox (see Figure 19 for an example of medium burn load).

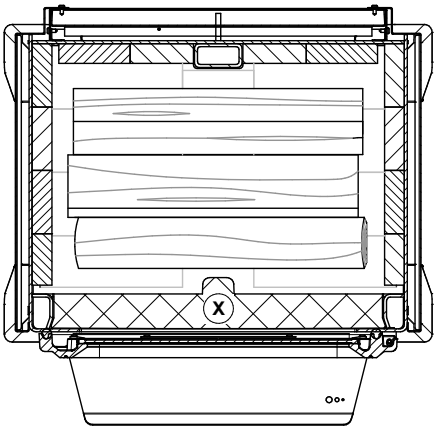

Figure 17: Position of the bottom pieces (Medium burn)

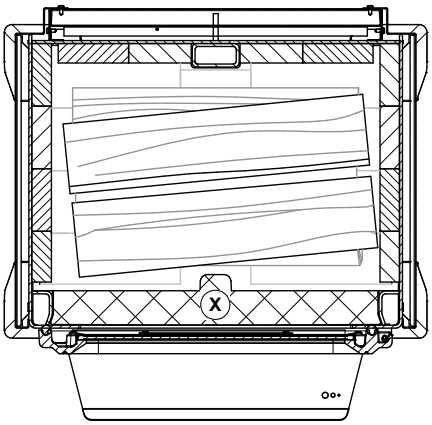

Figure 18: Position of the two top pieces (Medium burn)

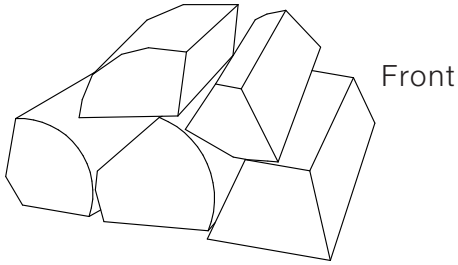

Figure 19: Example medium burn load (side view)

ENGLISH

Let the door ajar at 90° until the flames roll on top of the fuel (between 2:30 and 5:00) and then close the door with the primary air control open. See picture below for rolling flame:

Close the primary air control by small increments (ex: 1/16 of an inch) until reaching the mid-point of air control position, between 4 and 15 minutes after the loading period. Before closing further, make sure the flame intensity is increasing or stable. Turn ON the blower at maximum speed.

3. Clearances to Combustible Material

When the insert is installed so that its surfaces are at or beyond the minimum clearances specified, combustible surfaces will not overheat under normal and even abnormal operating conditions.

NO PART OF THE INSERT MAY BE LOCATED CLOSER TO THE COMBUSTIBLE THAN THE MINIMUM CLEARANCE FIGURES GIVEN.
CLEARANCES MAY ONLY BE REDUCED BY MEANS APPROVED BY THE REGULATORY AUTHORITY.

3.1 Minimum Masonry Opening and Clearances to Combustibles

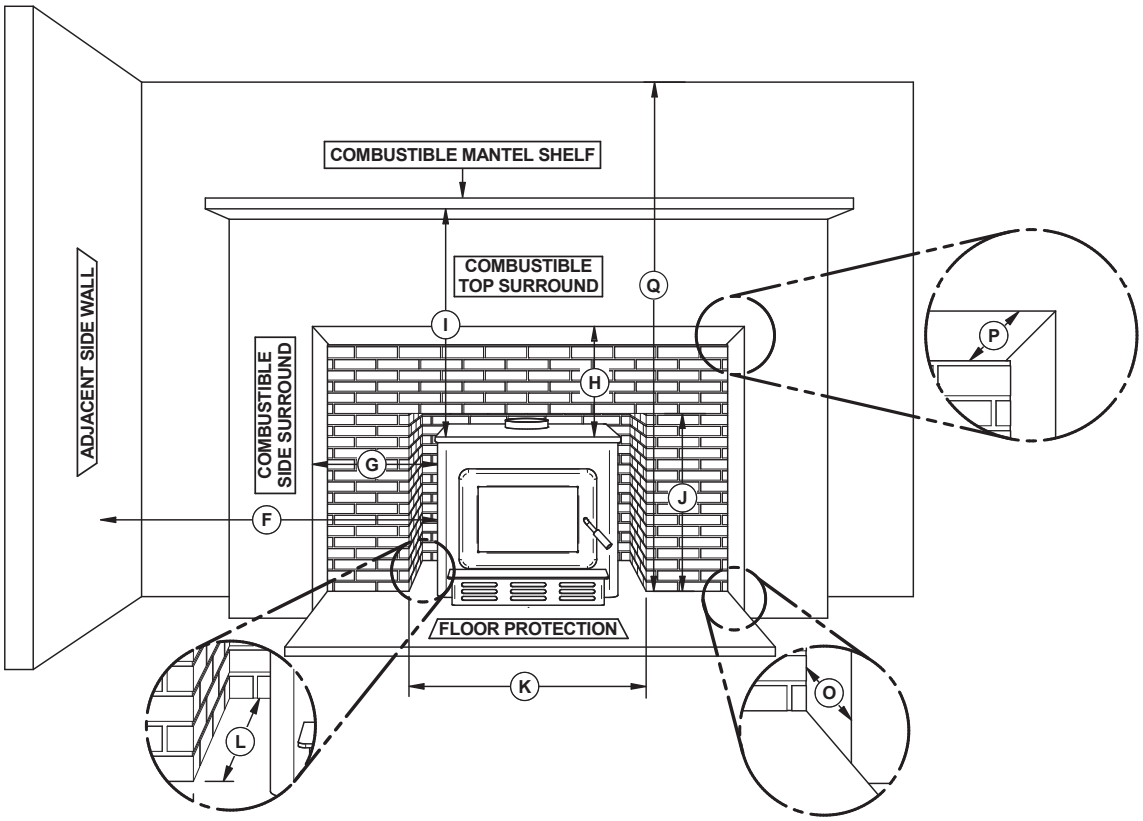

Masonry Opening and Clearances

	MINIMUM CLEARANCES
F	16" (406 mm)
G	9" (229 mm)
H	27" (686 mm)
I	27" (686 mm)
Q	84" (213 cm)

	MAXIMUM THICKNESS
O	5" (127 mm)
P	12" (305 mm)

	MINIMUM MASONRY OPENING
J	23 3/8" (594 mm)
K[1]	28 7/8" (733 mm)
L	15 3/4" (400 mm)

[1] If a fresh air intake is required, it is recommended to add at least 4" to the width of the minimum opening of the hearth.

ENGLISH

3.2 Floor Protection

t is necessary to have a floor protection made of non-combustible materials that meets the measurements specified in the "Table 1 : Floor Protection" below.

Table 1 : Floor Protection

	FLOOR PROTECTION	
	Canada	**USA**
B[1]	18" (457 mm)	16" (406 mm)
M	8" (203 mm)	N/A
N	N/A	8" (203 mm)

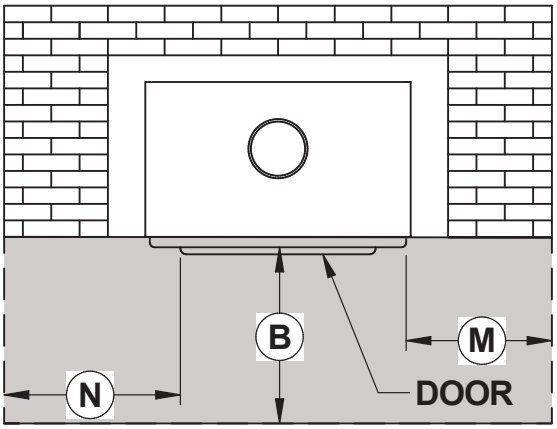

Floor Protection

ENGLISH

3.2.1 Installation Raised of 5" (127 mm) and Less

If non-combustible material floor protection needs to be added in front of and level with the hearth extension of the masonry fireplace (F = 5" [127 mm) or less), an R-value equal to or greater than 1.00 is required and should extend at least 23" (584 mm) in front of the unit **(B)**. Refer to "Additional Floor Protection - Not Raised Installation"

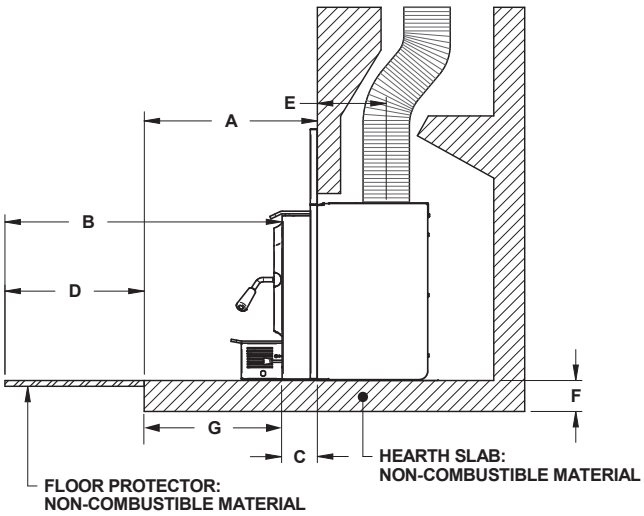

Additional Floor Protection - Not Raised Installation

[1]From door opening. The depth of the hearth extension in front of the insert is included in the calculation of the floor protector's dimensions. The masonry hearth should be at least 5" (127 mm) higher than the combustible floor in front of it and a floor protection must extend at least 16" (406 mm USA) and at least 18" (457 mm Canada) without an R value. If the hearth elevation is lower than 5" (127 mm), the non-combustible (B) floor protection in front of the insert should have an R value equal or greater than 1.00 and shall extend 23" (584 mm) in front of the unit.

3.2.2 Installation Raised of More Than 5" (127 mm)

If the extension of the masonry hearth is raised at least 5" (127 mm) from the floor protection, a non-combustible material, without an R-value, must extend at least 16" (406 mm in USA) or 18" (457 mm in Canada) in front of the unit **(B)**. Refer to "Additional Floor Protection - Raised Installation".

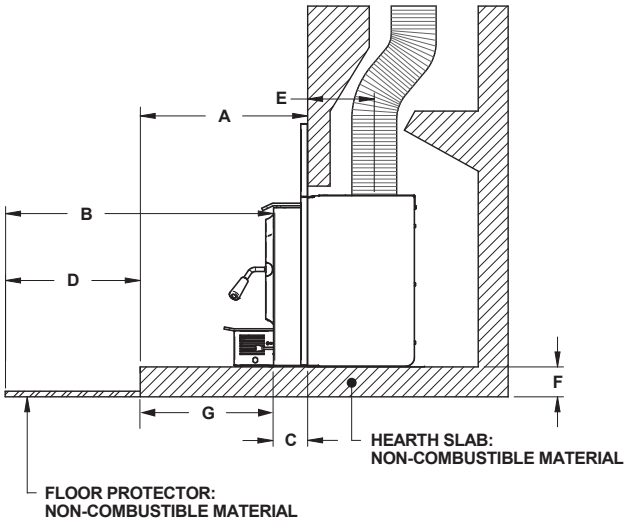

Additional Floor Protection - Raised Installation

ENGLISH

3.3 R Value

There are two ways to calculate the R-value of the floor protection. First, by adding the R-values of materials used, or by the conversion if the K factor and thickness of the floor protection are given.

To calculate the total R value from R values of the materials used, simply add the R-values of materials. If the result is equal to or greater than the R-value requirements, the combination is acceptable. R-values of some selected materials are shown below.

Table 2: Thermal Characteristics of Common Floor Protection Materials[1]

MATERIAL	CONDUCTIVITY (K) PER INCH	RESISTANCE (R) PER INCH THICKNESS
Micore® 160	0.39	2.54
Micore® 300	0.49	2.06
Durock®	1.92	0.52
Hardibacker®	1.95	0.51
Hardibacker® 500	2.3	0.44
Wonderboard®	3.23	0.31
Cement mortar	5.00	0.2
Common brick	5.00	0.2
Face brick	9.00	0.11
Marble	14.3 – 20.00	0.07 – 0.05

[1] Information as reported by manufacturers and other resources.

MATERIAL	CONDUCTIVITY (K) PER INCH	RESISTANCE (R) PER INCH THICKNESS
Ceramic tile	12.5	0.008
Concrete	1.050	0.950
Mineral wool insulation	0.320	3.120
Limestone	6.5	0.153
Ceramic board (Fibremax)	0.450	2.2
Horizontal still air (1/8" thick)[1]	0.135	0,920**

Exemple:

Required floor protection R of 1.00. Proposed materials: four inches of brick and one inch of Durock® board:

Four inches of brick (R = 4 x 0,2 = 0,8) plus 1 inch of Durock® (R = 1 x 0.52 = 0.52).

0.8 + 0.52 = 1.32.

This R value is larger than the required 1.00 and is therefore acceptable.

In the case of a known K and thickness of alternative materials to be used in combination, convert all K values to R by dividing the thickness of each material by its K value. Add R values of the proposed materials as shown in the previous example.

Exemple:

K value = 0.75
Thickness = 1
R value = Thickness/K = 1/0.75 = 1.33

ENGLISH

[1] Horizontal still air can't be «stack» to accumulate R-values; each layer must be separated with another non-combustible material.

4. Installing Options on Your Product and Replacing Parts

4.1 Replacement and Adjustment

4.1.1 Door

Note: The images shown are for guidance only and may be different from your product, but the assembly remains the same.

In order for the insert to burn at its best efficiency, the door must provide a perfect seal with the firebox. Therefore, the gasket should be inspected periodically to check for a good seal. The tightness of the door seal can be verified by closing and latching the door on a strip of paper. The test must be performed all around the door. If the paper slips out easily anywhere, either adjust the door or replace the gasket.

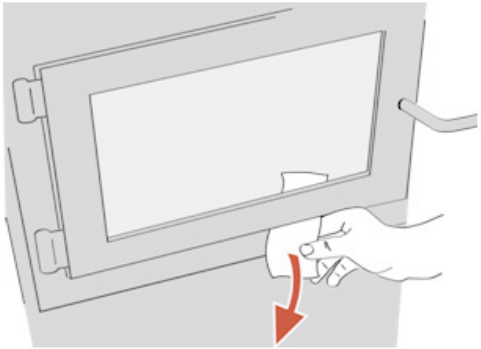

ENGLISH

4.1.2 Adjustment

The gasket seal may be improved with a simple latch mechanism adjustment:

1. Remove the split pin by pulling and turning it using pliers.
2. Turn the handle one counterclockwise turn to increase pressure.
3. Reinstall the split pin with a small hammer.

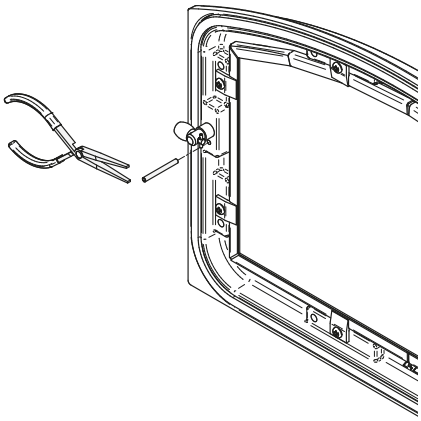

Figure 20 : Removing the split pin

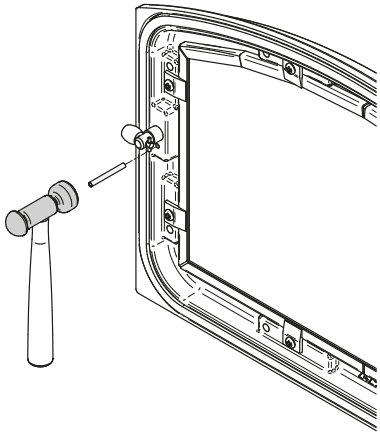

Figure 21 : Installing the split pin

4.1.3 Door Alignment

To align, open the door and loosen the pressures screws located on the lower and upper hinges of the door using a 3/32” Allen key to free the adjustable hinge rods.

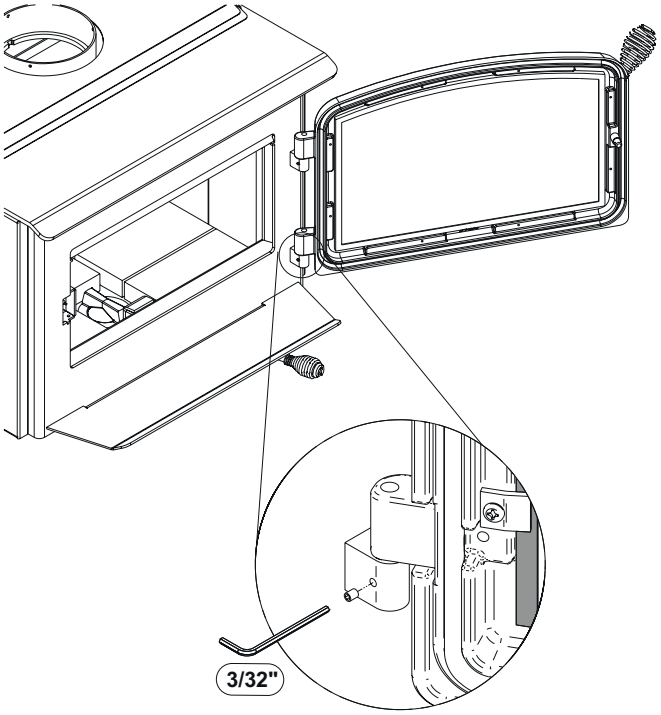

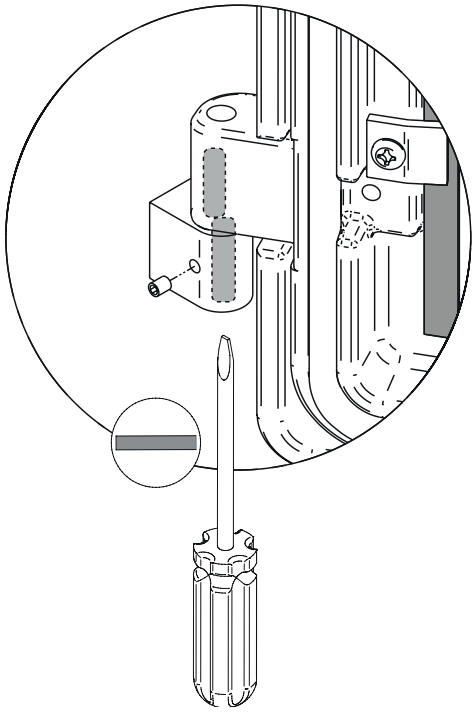

Using a flat screwdriver, turn the adjustable hinge rods in the direction shown to adjust the doors. Tighten all door hinge pressure screws when they are at the desired positions. Configurations 1-2-3-4-5-6, show in which direction these act on the adjustment of the door.

①		②		③		④	
	A		A		A		A
	B		B		B		B

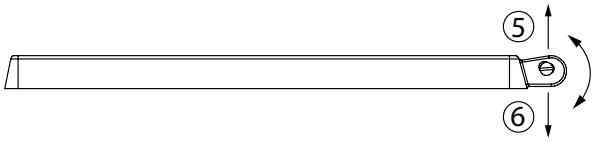

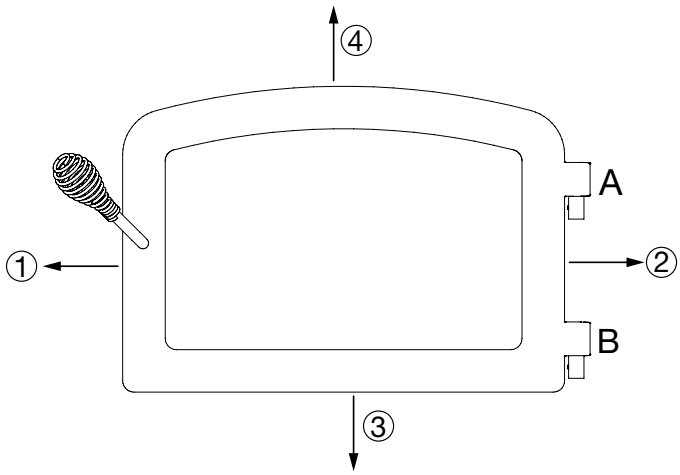

4.1.4 Gasket

It is important to replace the gasket with another having the same diameter and density to maintain a good seal.

1. Remove the door and place it face-down on something soft like a cushion of rags or a piece of carpet.
2. Remove the old gasket from the door. Use a screwdriver to scrape the old gasket adhesive from the door gasket groove.
3. Apply a bead of approximately 3/16" (5 mm) of high temperature silicone in the door gasket groove. Starting from the middle, hinges side, press the gasket into the groove. The gasket must not be stretched during installation.
4. Leave about ½" (10 mm) long of the gasket when cutting and press the end into the groove. Tuck any loose fibers under the gasket and into the silicone.
5. Close the door. Do not use the insert for 24 hours.

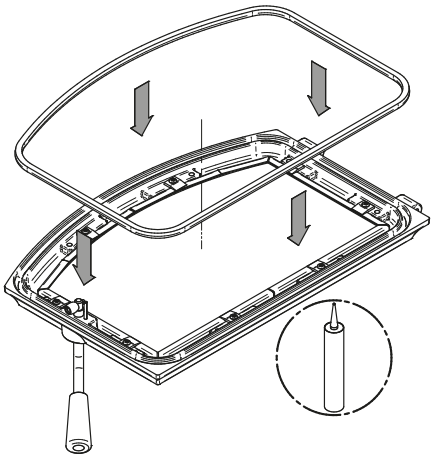

ENGLISH

4.1.5 Glass Replacement

The glass used is a ceramic glass, 5/32" (4 mm) thick, 10 3/16" x 17 1/8" (259 mm x 435 mm) tested to reach temperatures up to 1400° F. If the glass breaks, it must be replaced by a ceramic glass from SCHOTT with the same specification. Contact your dealer to obtain a genuine replacement part.**Tempered glass or ordinary glass will not withstand the high temperatures of this unit.**

WARNING : DO NOT USE SUBSTITUTE MATERIALS WHEN REPLACING THE GLASS.

To remove or replace the glass **(D)**:

6. Remove the door from its hinges and lay it on a soft, flat surface.
7. Remove the screws **(A)**, the glass retainers **(B)**, and the metal frames **(C)**.
8. Remove the glass **(D)**. If it is damaged install a new one in place. The replacement glass must have a gasket all around (see procedure below).
9. Reinstall the glass, being careful to centre the glass in the door and not to over-tightening the retaining screw.

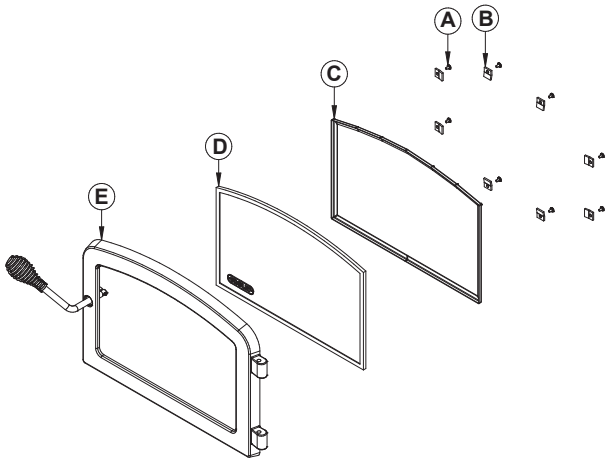

Figure 22 : Replacing the glass

The two main causes of broken door glass are uneven placement in the door and over-tightening the retaining screws.

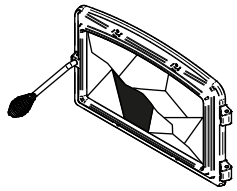

Do not clean the glass when the stove is hot.

Do not abuse the glass door by striking or slamming shut.

Do not use the stove if the glass is broken.

ENGLISH

4.1.6 Glass Gasket Replacement

The glass gasket is flat, adhesive-backed, woven fibreglass. The gasket must be centred on the edge of the glass.

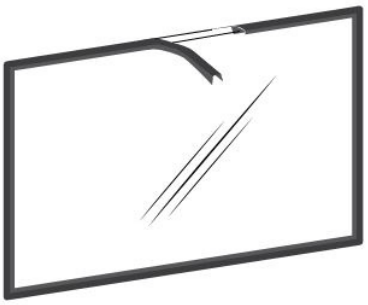

1. Follow the steps of the previous section to remove the glass.
2. Remove the old gasket and clean the glass thoroughly.
3. Peel back a section of the paper covering the adhesive and place the gasket on a table with the adhesive side up.
4. Stick the end of the gasket to the middle of one edge, then press the edge of the glass down onto the gasket, taking care that it is perfectly centred on the gasket.
5. Peel off more of the backing and rotate the glass. The gasket must not be stretched during installation.
6. Cut the gasket to the required length.
7. Pinch the gasket onto the glass in a U shape, all around the glass.

By following these instructions, the edge clearances are maintain.

ENGLISH

4.2 Mandatory Installation

- Empty the combustion chamber and install the air control handle **(A)** with the set screw **(B)** as shown below:

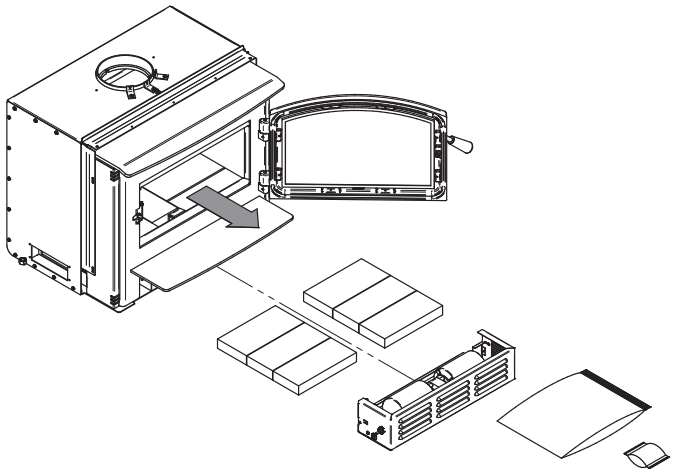

Figure 23 : Empty the combustion chamber

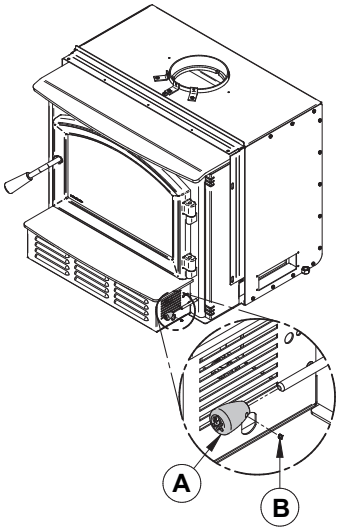

Figure 24 : Installing the air control wood handle

- Install the combustion chamber side bricks as shown below.

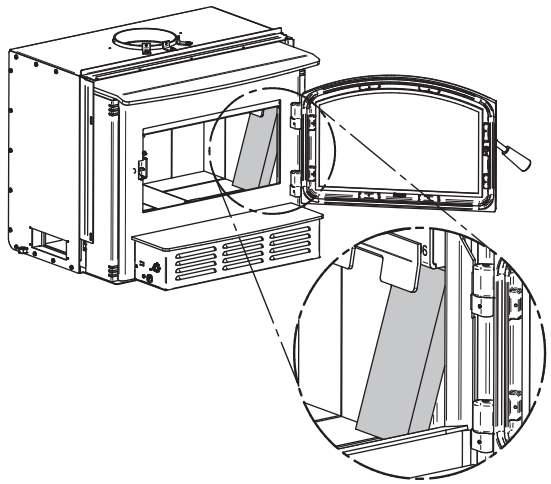

Figure 25 : Install the Combustion Chamber Bricks

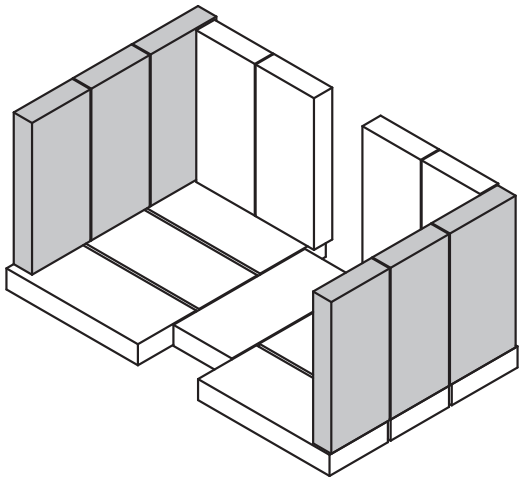

Figure 26 : Combustion Chamber Bricks Layout

ENGLISH

4.3 Blower and Ash Lip Installation

Note: The images shown are for guidance only and may be different from your product, but the assembly remains the same.

1. Install the ash lip **(A)** on the insert with three screws **(B)**.

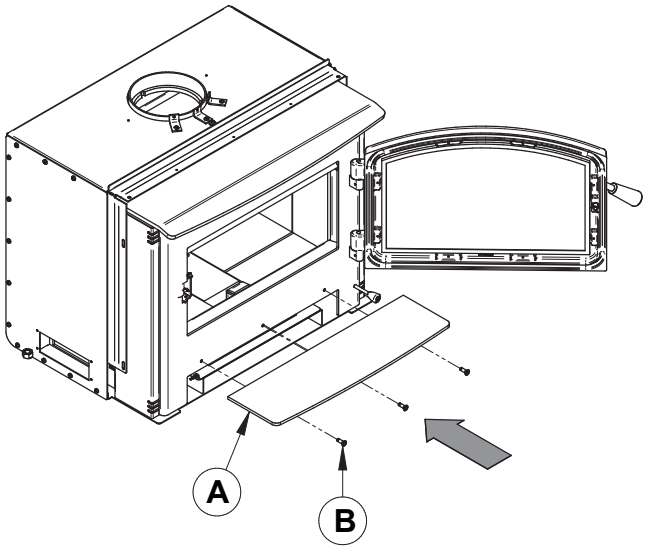

2. Center the blower on the ash lip and push it against the firebox. Then push it until it clips.

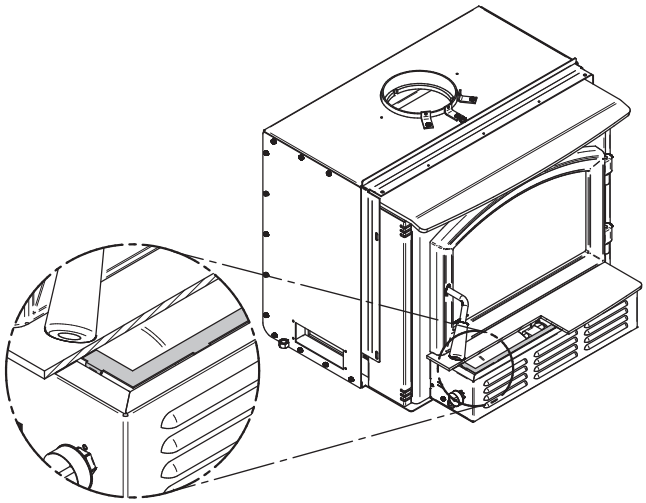

4.4 Installation and setting of the leveling system

1. With the 2x bolts (A – 30051), 2x supports (B – 31365), 2x nuts (C – 30423) and 4 screws (D – 30094) supplied with the insert's manual kit. Pre-assemble the leveling systems by screwing the bolt (A) to the maximum into the support (B). Then screw the nut (C) without tightening it.

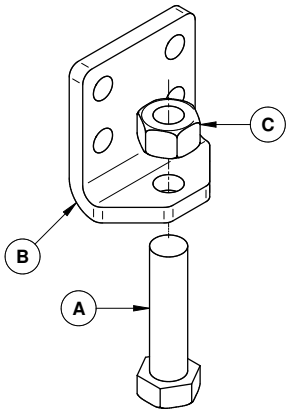

2. Install the leveling system on both side at the back of the unit with 2 screws (D) using a power drill with a 5/16" hex head.

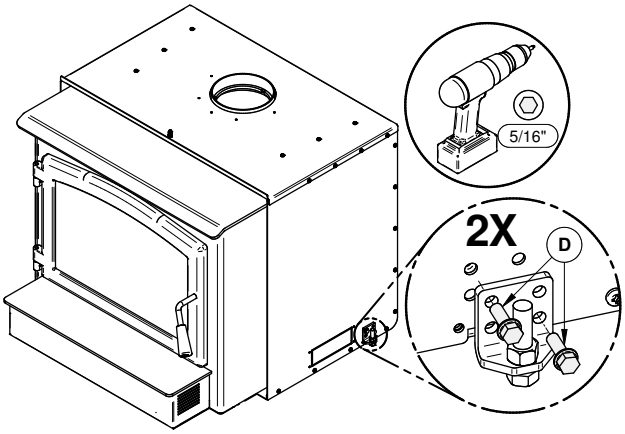

3. With a 9/16" wrench, adjust the bolt (A) on both sides to level the insert in its masonry hearth. Once the unit leveled, secure it in place by tightening the nuts (C).

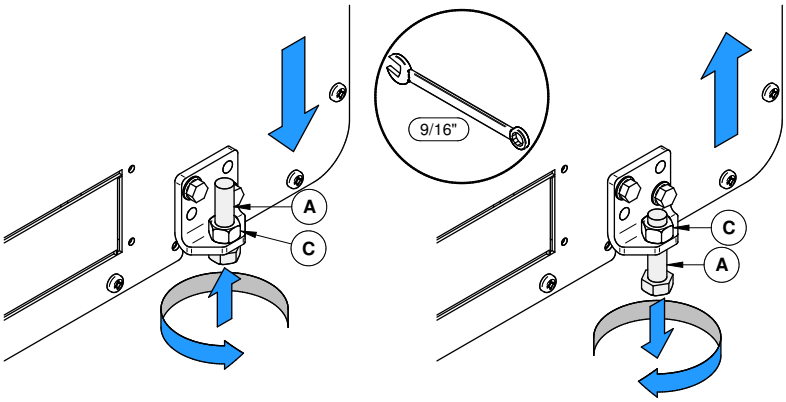

ENGLISH

4.5 Optional Cuttable Faceplate Installation

This 18G steel faceplate is cuttable to the desired shape of the fireplace opening if it contains irregular edges (e.g.: fieldstones). The use of a template may be useful prior to cutting of the faceplate.

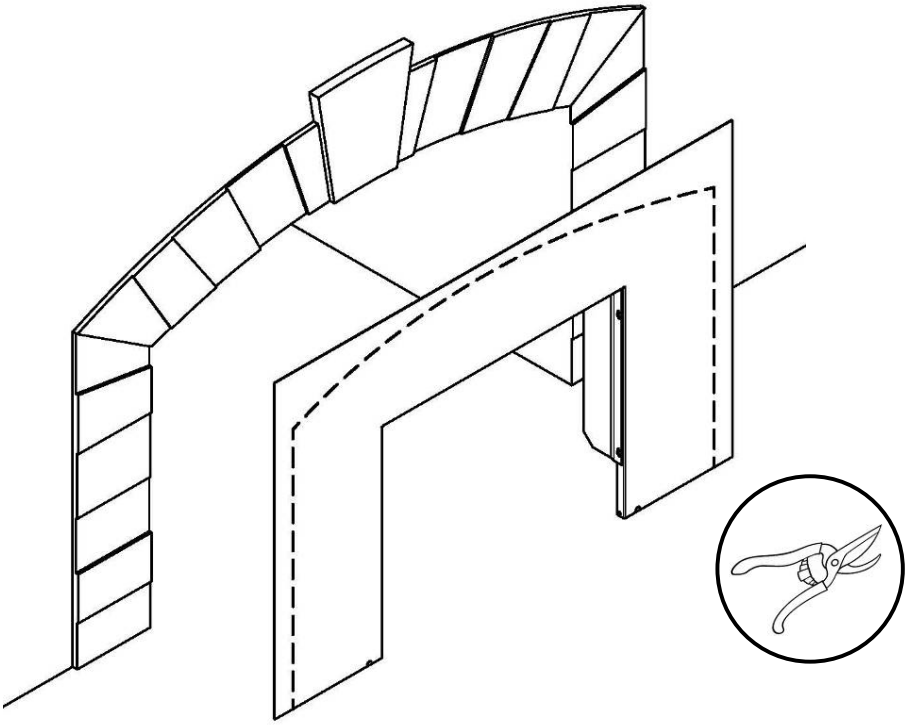

See the installation manual provided with the faceplate.

ENGLISH

4.6 Log Retainers Installation

1.

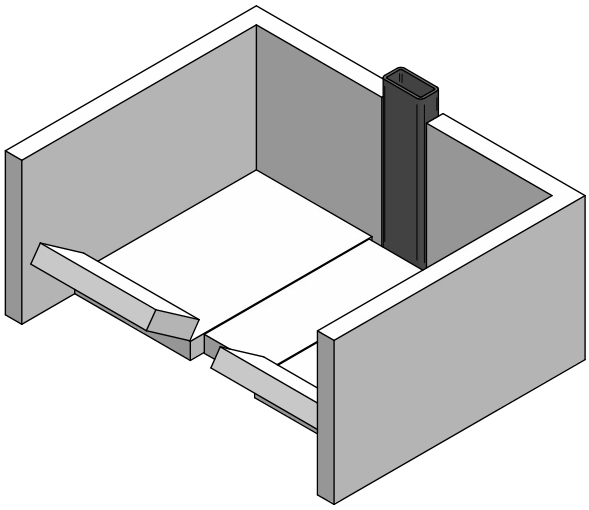

2.

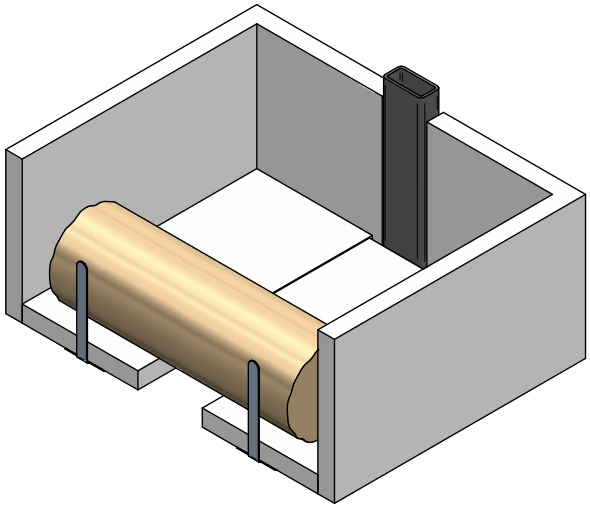

3.

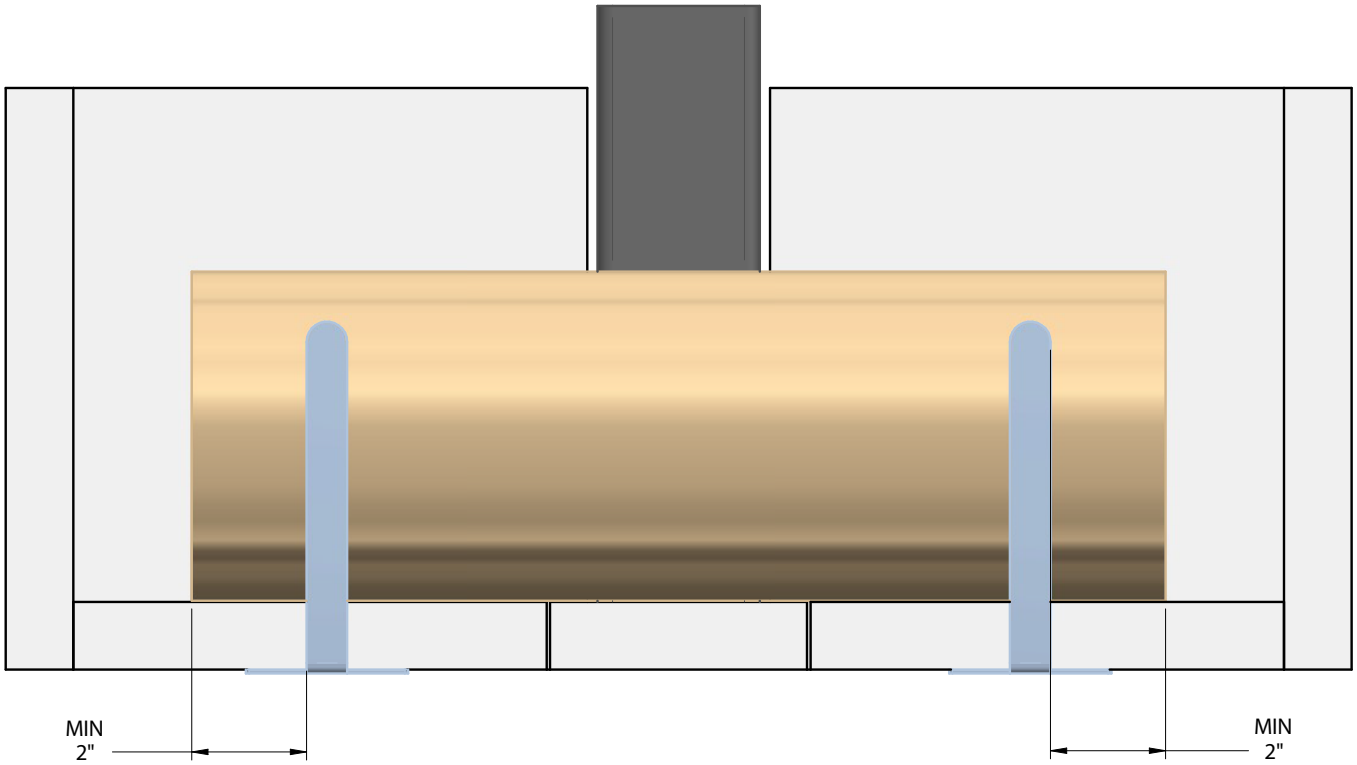

ENGLISH

4.7 Optional Faceplate And Trims Installation

The illustrations may vary from one model to another, but the method of assembly remains the same.

Hardware bag content:

- Bolts #10-24 x 1/2" (8x)
- Corner bracket and screws (2x)
- Trim retainers (8x)
- Nuts #10-24 (8X)

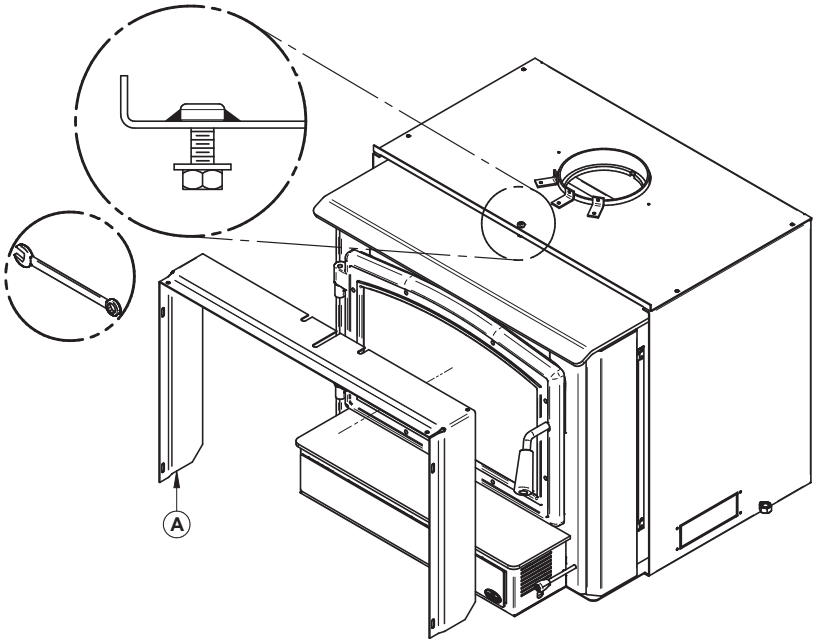

1. Remove the faceplate extension **(A)** secured between the firebox and the convection air jacket.

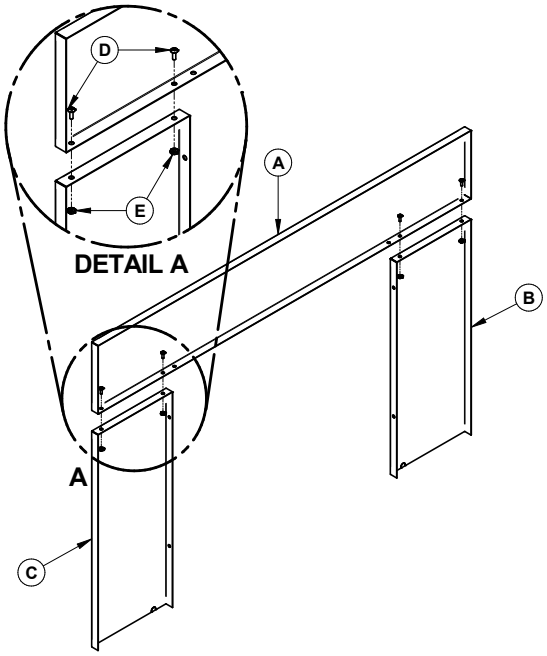

2. Place the faceplate panels with the finished side down on a flat, soft, non-abrasive surface. Line up the holes of the upper faceplate panel **(A)** with the holes of the side panels **(B)** and **(C)**. Secure them together using four bolts **(D)** and nuts **(E)** provided.

ENGLISH

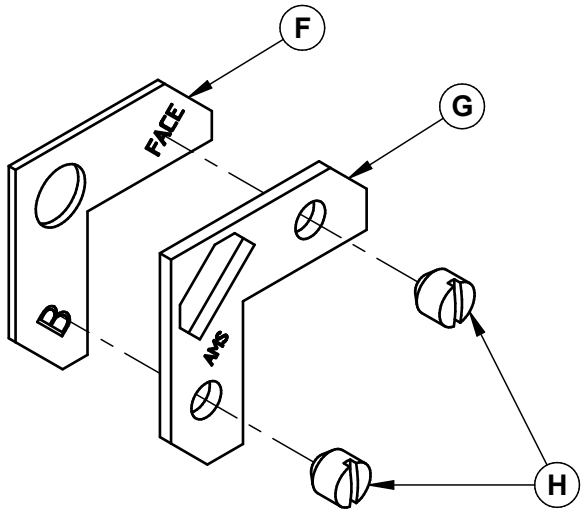

3. Partially thread the screws **(H)** on the trim's corner bracket **(G)** then superimpose the corner brackets **(F)** and **(G)** as shown.

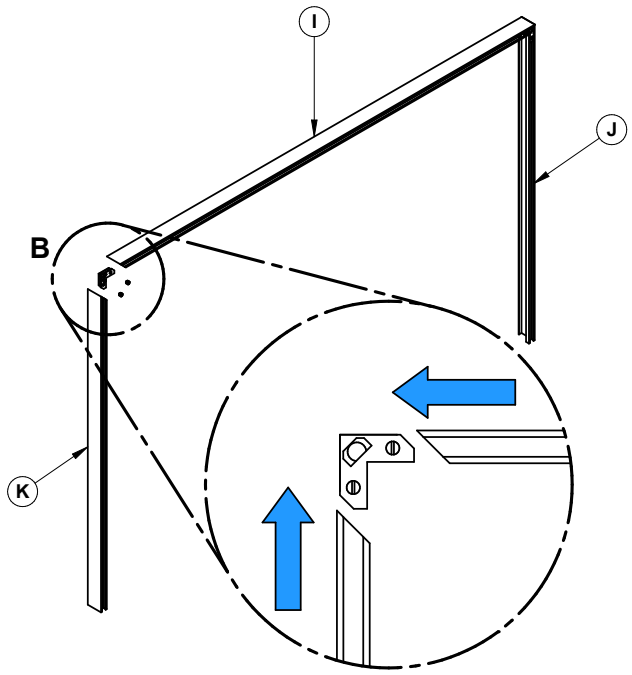

4. Insert the superimposed brackets in the groove of each decorative trim **(I)**, **(J)** and **(K)**. Align the corners of the angled side of each trim, and then tighten the screws **(H)** to secure the trims.

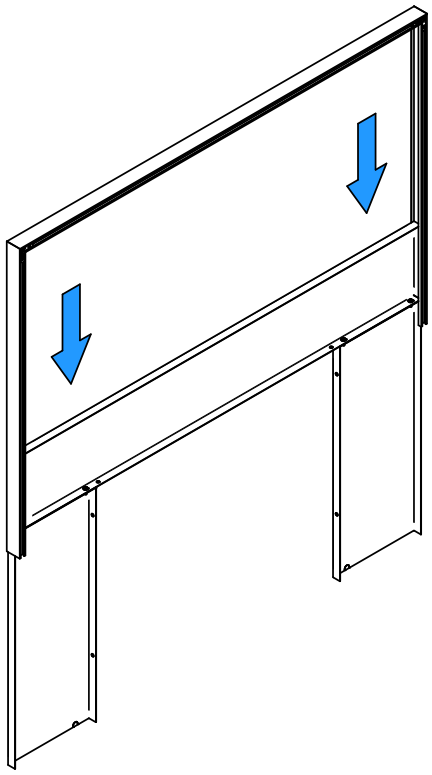

5. Align the trim assembly with the left and right edge of the faceplate and slowly slide it down over the faceplate.

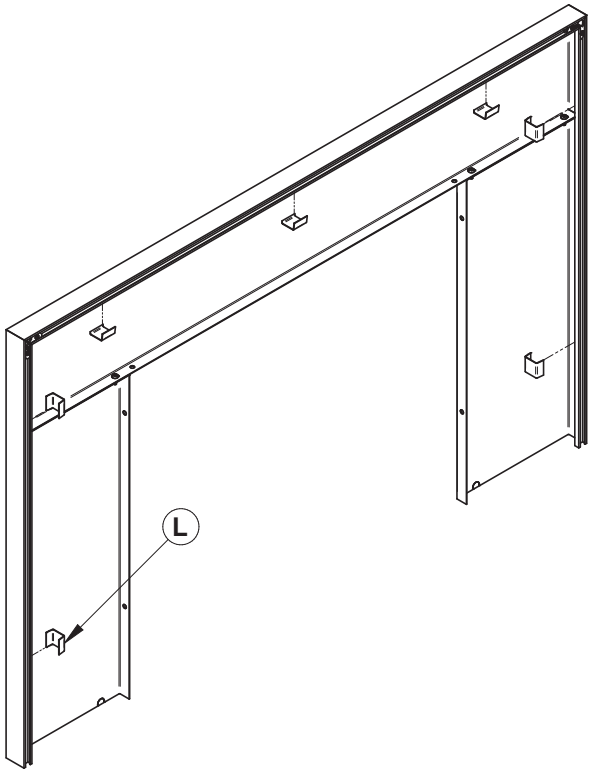

6. Secure the trim to the faceplate by squeezing the eight trim retainers **(L)** between the inner edge of the trim and the front of the faceplate.

ENGLISH

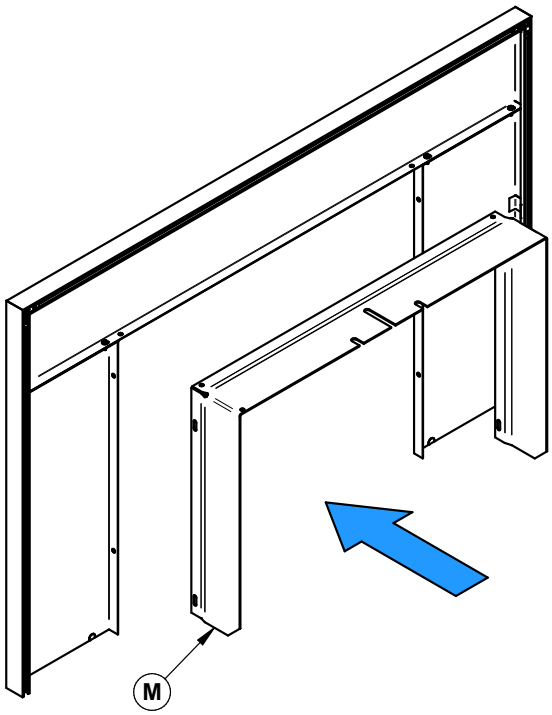

7. Align the holes in the faceplate extension **(M)** with the holes in each faceplate side panels.

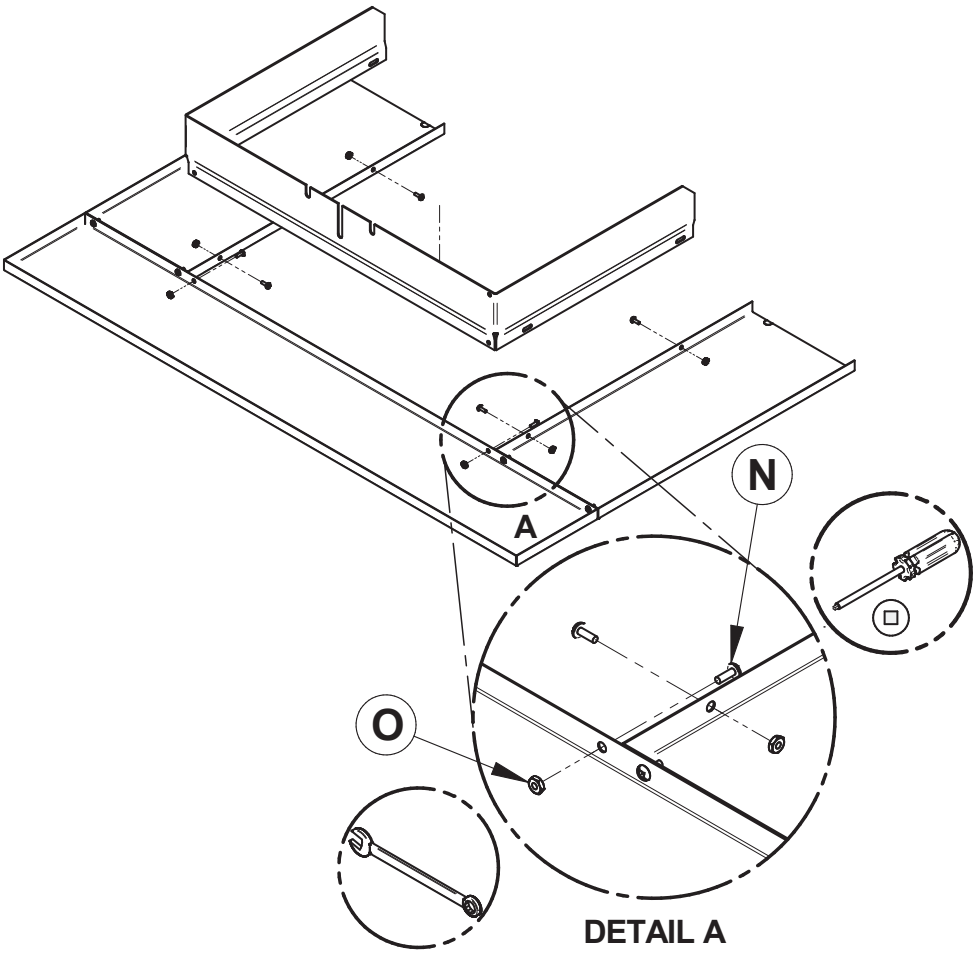

8. Secure both assemblies together using 6 bolts **(N)** and nuts **(O)** provided.

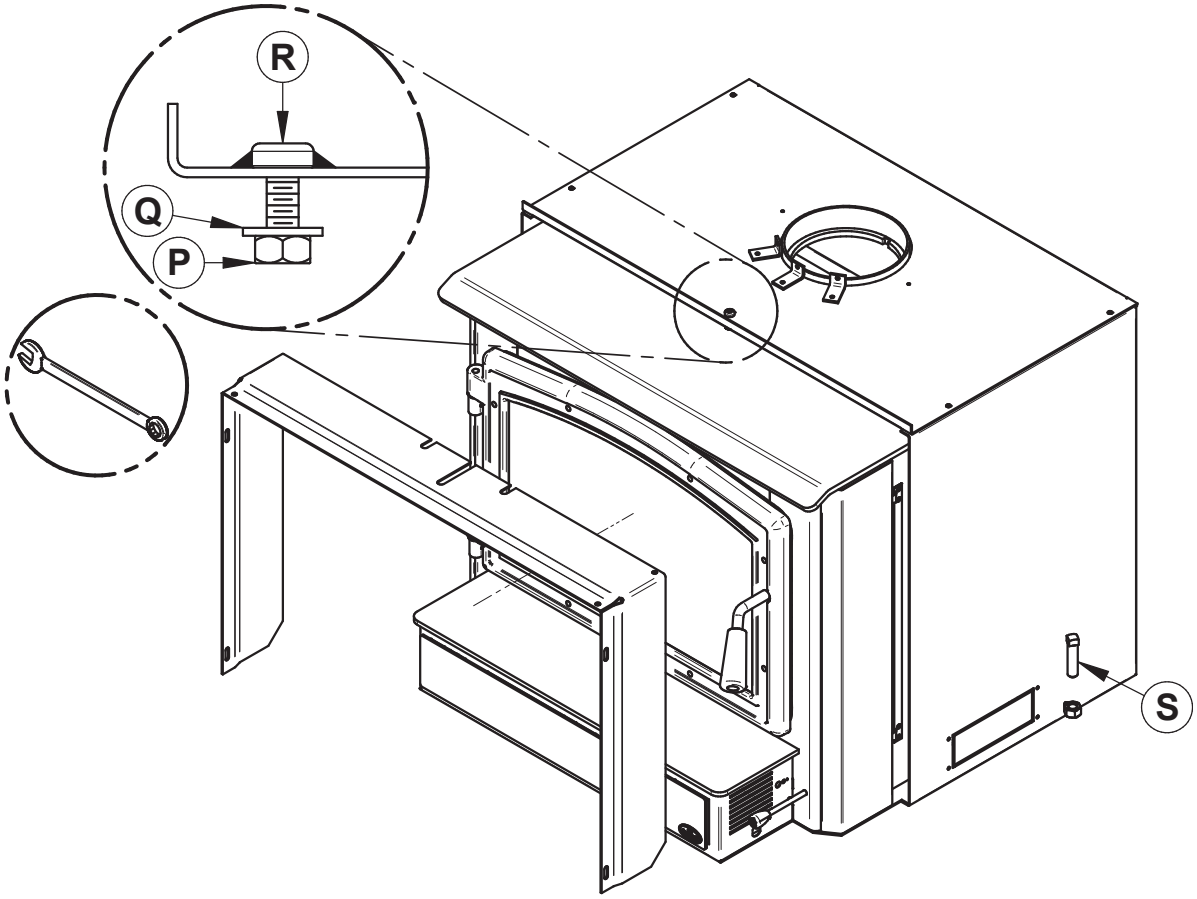

9. Center the insert into the fireplace opening.

   If necessary, adjust the height of the insert using the leveling bolts **(S)** *on each side of the convection air jacket until the faceplate is properly seated on the floor of the hearth extension.*

10. Align the notch in the faceplate extension with the bolt **(P)** welded to the air jacket located and slide the faceplate assembly just over the bolt's head and washer **(Q)**. Then push towards the fireplace.

11. Once the faceplate is in place, secure the assembly by tightening nuts **(R)** using a 7/16" (11 mm) open end wrench.

ENGLISH

4.8 Optional Fresh Air Intake Kit Installation

Note: The images shown are for guidance only and may be different from your product, but the assembly remains the same.

The fresh air intake kit may be installed on the right or left end side of the unit. The unused side must be covered by the plate provided in the user manual kit.

1. Install the fresh air intake adapter **(E)** with four screws **(F)** then secure the flexible pipe[1] **(H)** (not included) to the adapter using one of the pipe clamps **(G)**. Secure the other end of the pipe to the outside wall termination **(J)** using the other pipe clamp. The outside wall termination must be installed outside of the home.

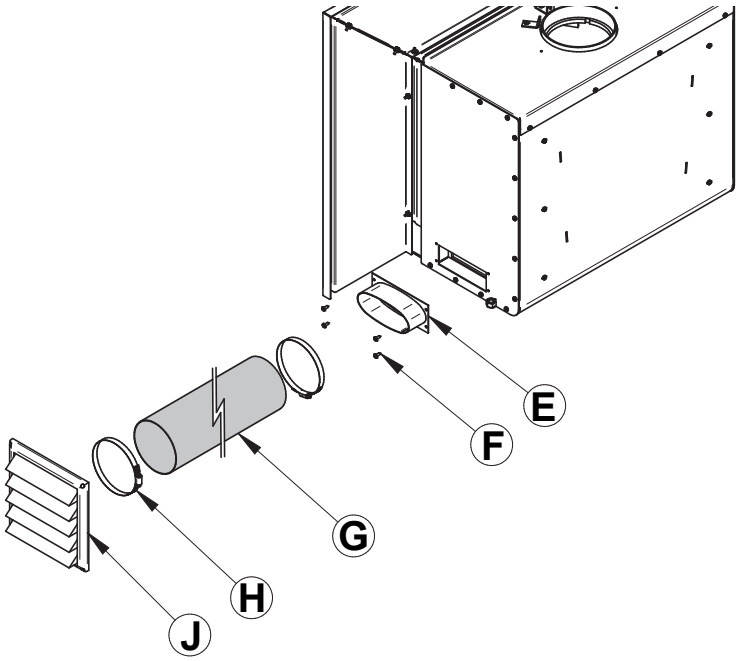

2. Install the plate **(K)** with four screws **(L)** on the unused side of the insert.

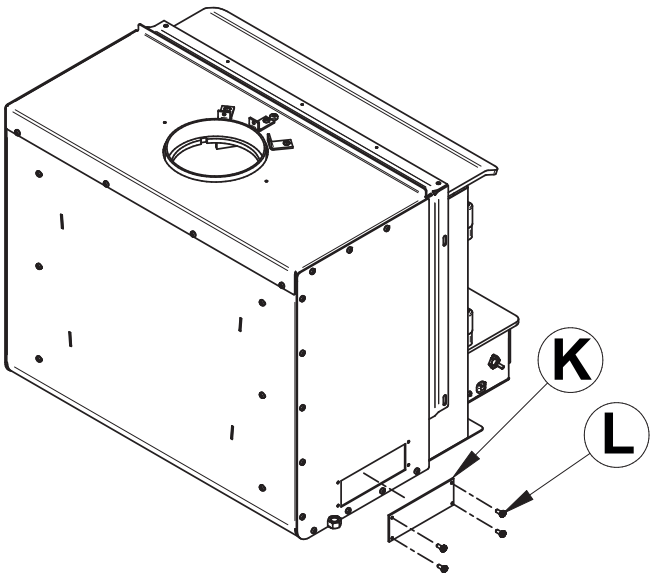

[15] The pipe must be HVAC type, insulated, and must comply with ULC S110 and/or UL 181, Class 0 or Class 1.

ENGLISH

4.9 Optional Fire Screen Installation

Note: The images shown are for guidance only and may be different from your product, but the assembly remains the same.

In the United States or in provinces with a particulate emissions limit (e.g.: US EPA), the use of open-door wood stoves with a rigid firescreen is prohibited.

1. Open the door.

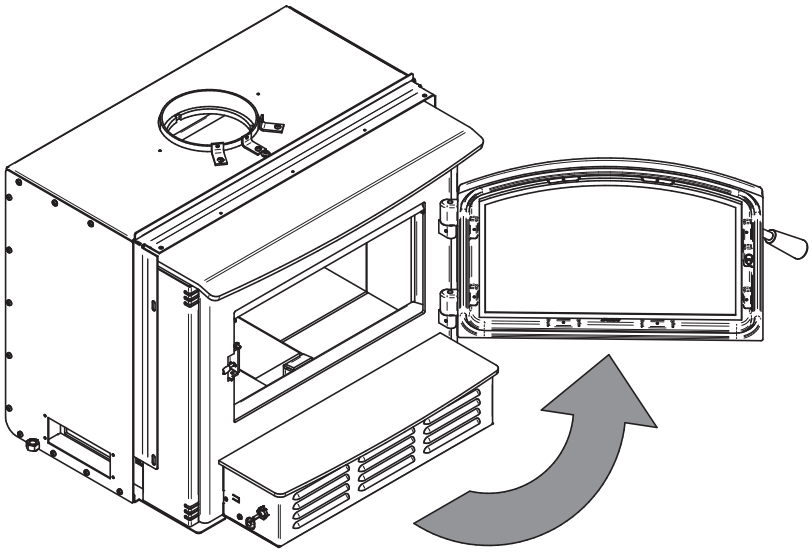

2. Hold the fire screen by the two handles and bring it close to the door opening.

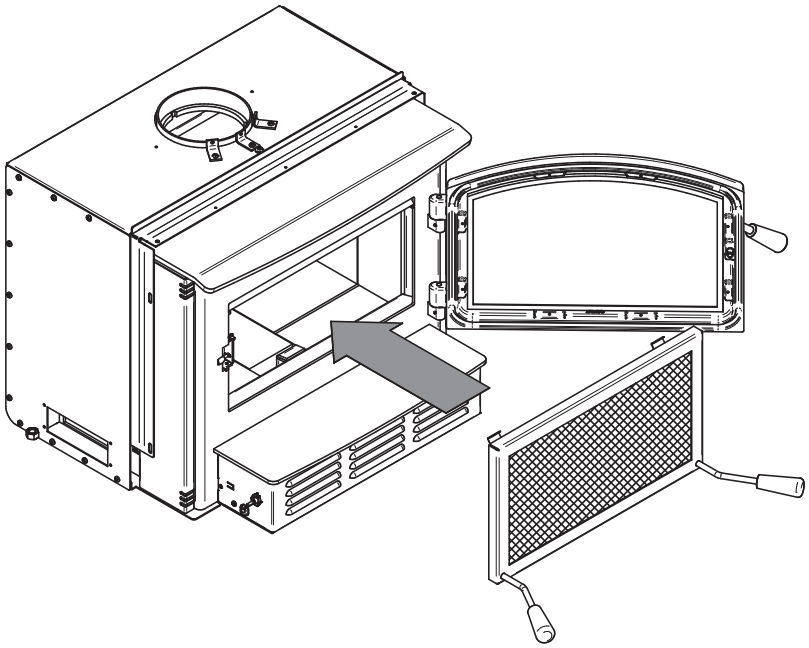

ENGLISH

3. Lean the upper part of the fire screen against the top door opening making sure to insert the top fire screen brackets behind the primary air deflector.

4. Lift the fire screen upwards and push the bottom part towards the insert then let the fire screen rest on the bottom of the door opening.

Warning: Never leave the insert unattended while in use with the fire screen.

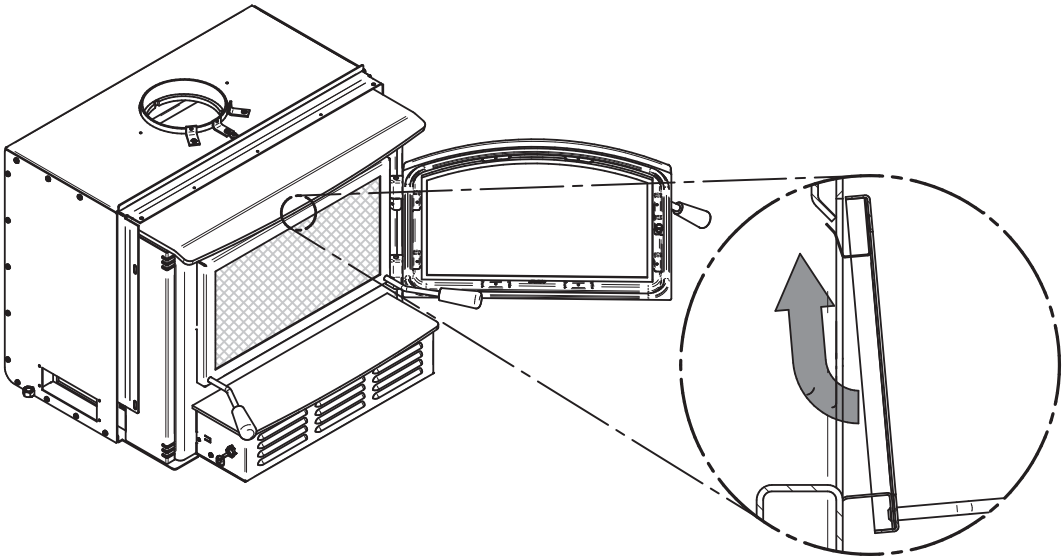

ENGLISH

4.10 Air Tubes and Baffle Installation

1. Starting with the rear tube, lean and insert the right end of the secondary air tube into the rear right channel hole. Then lift and insert the left end of the tube into the rear left channel.

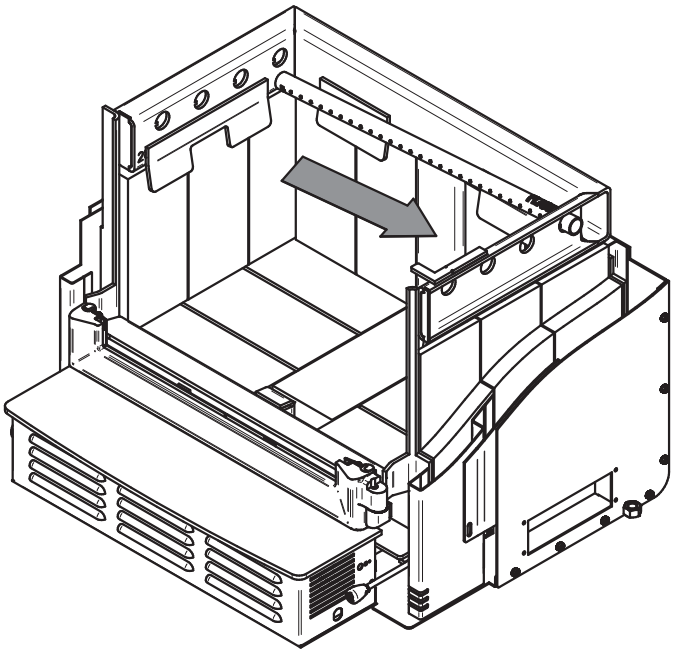

2. Align the notch in the left end of the tube with the key of the left air channel hole. Using a « Wise grip » hold the tube and lock it in place by turning the tube as shown. Make sure the notch reaches the end of the key way.

3. Install the baffle.

4. Repeat steps 1 and 2 for the three other tubes.

5. To remove the tubes use the above steps in reverse order.

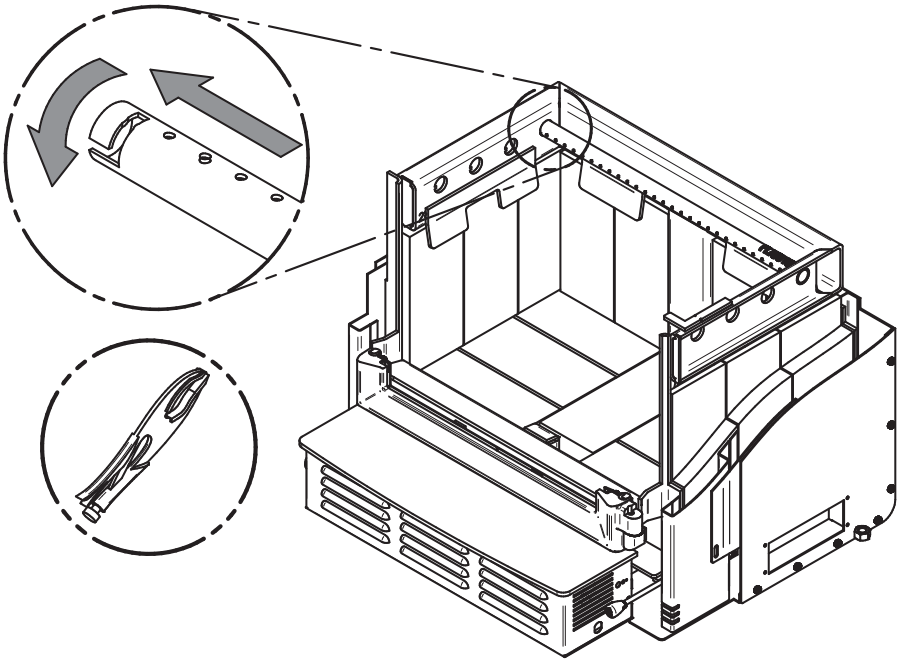

Note that secondary air tubes **(A)** *can be replaced without removing the baffle board* **(B)** *and that all tubes are identical.*

ENGLISH

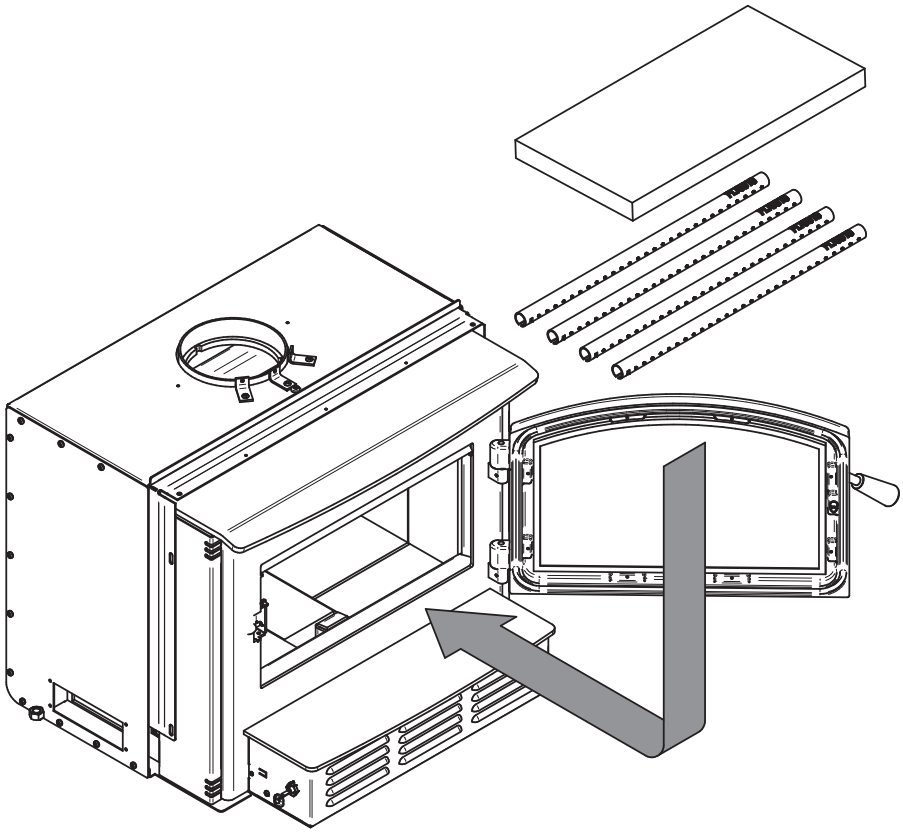
TUBES
TUBES
TUBES
TUBES

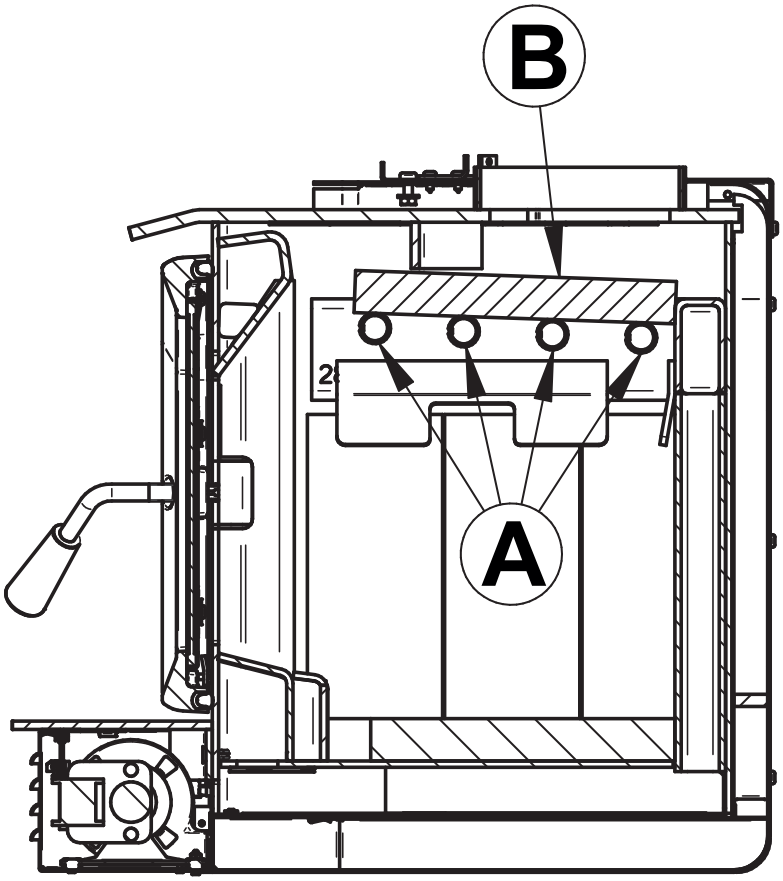
B
A

4.11 Removal Instructions

For the purpose of inspecting the insert itself or the fireplace, your insert may need to be removed. To remove your insert follow these instructions:

- Unscrew the nut secured on the screw (B) holding the faceplate extension (C) to the insert.
- Remove faceplate (D) by pulling it towards you.
- Remove the blower assembly (E).
- Remove the three screws securing the pipe connector (A).
- Unscrew the levelling bolts (F) located on each side of the insert.
- Move the insert to perform maintenance.

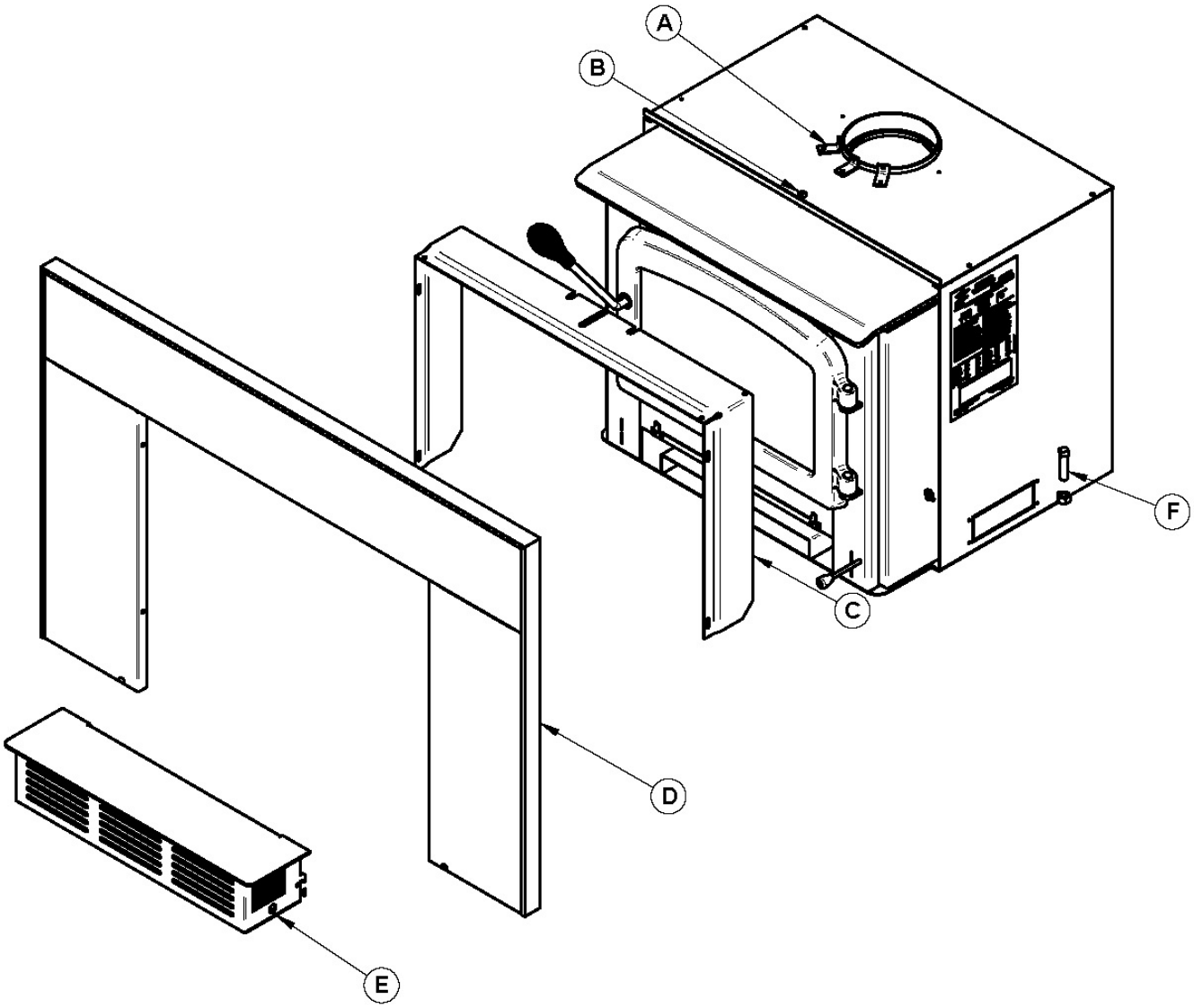

ENGLISH

4.12 Exploded Diagram and Parts List

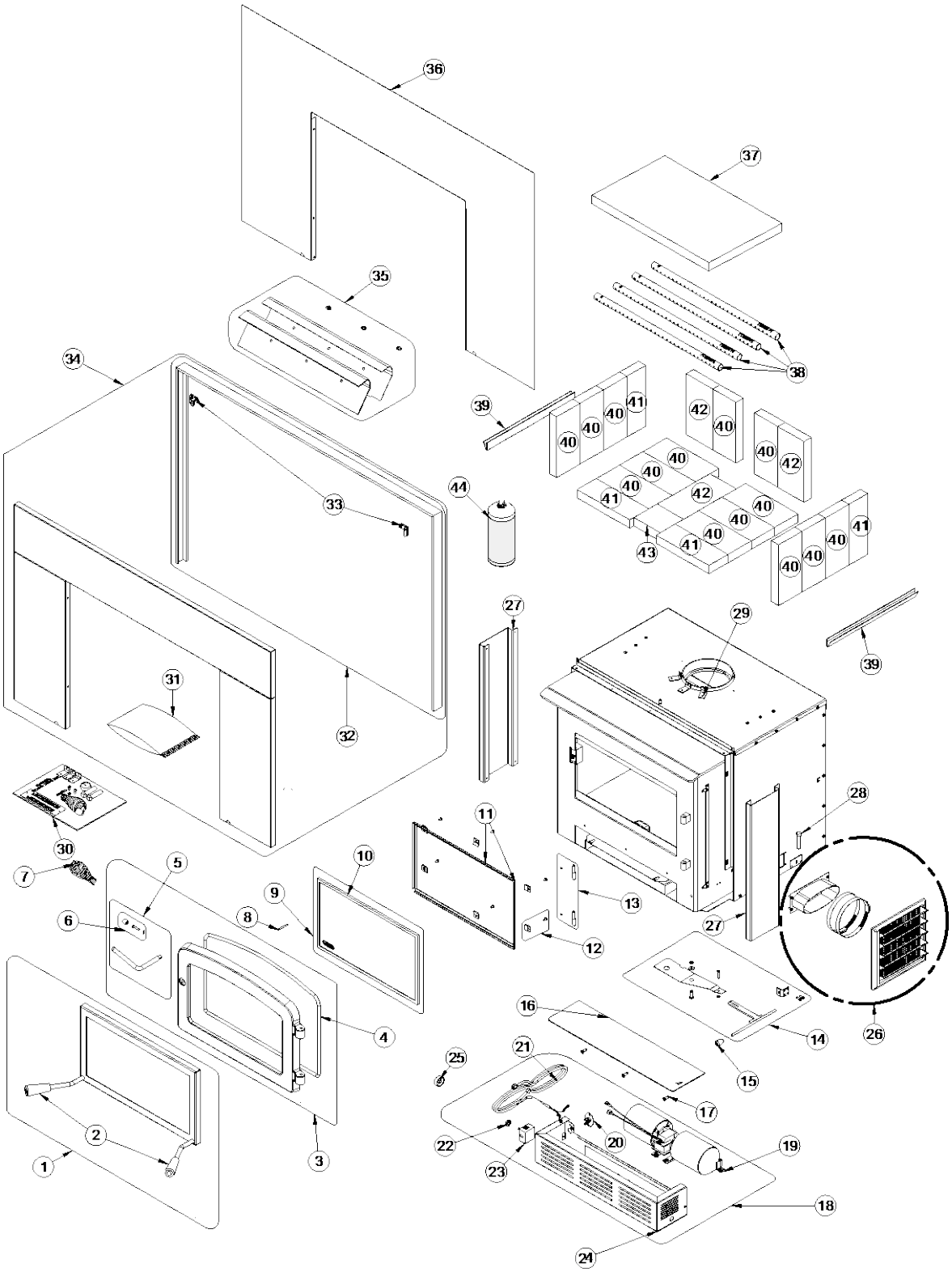

ENGLISH

IMPORTANT: THIS IS DATED INFORMATION. When requesting service or replacement parts for this unit, please provide the model number and the serial number. We reserve the right to change parts due to technology upgrades or availability. Contact an authorized dealer to obtain any of these parts. Never use substitute materials. Use of non-approved parts can result in poor performance and safety hazards.

#	Item	Description	Qty
1	AC01315	RIGID FIRESCREEN	1
2	SE74166	HANDLE 30898 REPLACEMENT KIT	1
3	SE24107-08	DOOR ASSEMBLY	1
4	AC06500	SILICONE AND 5/8" X 8' BLACK DOOR GASKET KIT	1
5	SE70697	REPLACEMENT HANDLE WITH LATCH KIT	1
6	AC09185	DOOR LATCH KIT	1
7	AC07867	1/2" CHROME PLATED COIL HANDLE	1
8	30101	SPRING TENSION PIN 5/32"Ø X 1 1/2"L	1
9	SE55103	GLASS WITH GASKET - 17 1/8"W X 10 3/16"H	1
10	AC06400	3/4" X 6' FLAT BLACK SELF-ADHESIVE GLASS GASKET	1
11	PL55041	GLASS RETAINER FRAME	2
12	SE53585	GLASS RETAINER KIT WITH SCREWS (12 PER KIT)	1
13	SE74167	DOOR HINGE REPLACEMENT KIT	1
14	SE74169	INSERT TRAP KIT	1
15	30102	1/4'' CAST STEEL AIR CONTROL HANDLE WITH MOUNTING SCREW	1
16	SE74124	ASHTRAY ASSEMBLY	1
17	30507	BLACK TORX SCREW WITH FLAT HEAD TYPE F 1/4-20 X 3/4"	3
18	SE74125	BLOWER ASSEMBLY	1
19	44089	DOUBLE CAGE BLOWER 144 CFM 115V - 60Hz - 1.1A	1
20	44028	CERAMIC THERMODISC F110-20F	1
21	60013	POWER CORD 96" X 18-3 type SJT (50 pcs per carton)	1
22	44087	RHEOSTAT NUT	1
23	44080	RHEOSTAT WITHOUT NUT (MODEL KBMS-13BV)	1
24	PL74125	BLOWER HOUSING	1
25	44085	RHEOSTAT KNOB	1
26	AC01298	5"Ø FRESH AIR INTAKE KIT	1
27	PL53722	RIGHT DECORATIVE PANEL	1
28	30337	SQUARE HEAD SET SCREW 1/2-13 X 1-3/4"	2
29	PL34052	LINER FIXATION BRACKET	1
30	SE45931	ESCAPE 1800 INSERT INSTRUCTION MANUAL KIT	1
31	SE15097	FACEPLATE HARDWARE KIT	1
32	OA10123	BRUSHED NICKEL FACEPLATE TRIMS (29" X 44")	1
32	OA10129	BRUSHED NICKEL LARGE FACEPLATE TRIMS (32" X 50")	1

#	Item	Description	Qty
33	30456	AMS HARDWARE KIT (TAPPED CORNERS AND BACK PLATES)	1
34	AC03375	LARGE FACEPLATE 32" X 50'' WITH NICKEL TRIM KIT	1
34	AC03370	REGULAR FACEPLATE 29'' X 44'' WITH NICKEL TRIM KIT	1
35	SE65505	TOP AIR DEFLECTOR PROTECTOR KIT	1
36	AC01357	32'' X 50'' CUTTABLE FACEPLATE (18 GA)	1
37	21388	VERMICULITE BAFFLE 20" X 12 1/2" X 1 1/4"	1
38	PL65514	SECONDARY AIR TUBE	4
39	PL65127	FLOORED BRICK RETAINER	2
40	29015	4'' X 9'' X 1 1/4'' REFRACTORY BRICK	14
41	29007	3 1/4'' X 9'' X 1 1/4'' REFRACTORY BRICK	4
42	29010	4 1/2" X 9" X 1 1/4" REFRACTORY BRICK	3
43	29004	4'' X 4 1/2'' X 1 1/4'' REFRACTORY BRICK	1
44	AC05959	METALLIC BLACK STOVE PAINT - 342 g (12oz) AEROSOL	1

DROLET LIMITED LIFETIME WARRANTY

The warranty of the manufacturer extends only to the original retail purchaser and is not transferable. This warranty covers brand new products only, which have not been altered, modified nor repaired since shipment from the factory. Proof of purchase (dated bill of sale), model name and serial number must be supplied when making any warranty claim to the DROLET dealer.

This warranty applies to normal residential use only. This warranty is void if the unit is used to burn material other than cordwood (for which the unit is not certified by EPA) and void if not operated according to the owner's manual. Damages caused by misuse, abuse, improper installation, lack of maintenance, over firing, negligence or accident during transportation, power failures, downdrafts, venting problems or underestimated heating area are not covered by this warranty. The recommended heated area for a given appliance is defined by the manufacturer as its capacity to maintain a minimum acceptable temperature in the designated area in case of a power failure.

This warranty does not cover any scratch, corrosion, distortion, or discoloration. Any defect or damage caused by the use of unauthorized or other than the original parts voids this warranty. An authorized qualified technician must perform the installation in accordance with the instructions supplied with this product and all local and national building codes. Any service call related to an improper installation is not covered by this warranty.

The manufacturer may require that defective products be returned or that digital pictures be provided to support the claim. Returned products are to be shipped prepaid to the manufacturer for investigation. Transportation fees to ship the product back to the purchaser will be paid by the manufacturer. Repair work covered by the warranty, executed at the purchaser's domicile by an authorized qualified technician requires the prior approval of the manufacturer. All parts and labour costs covered by this warranty are limited according to the table below.

The manufacturer, at its discretion, may decide to repair or replace any part or unit after inspection and investigation of the defect. The manufacturer may, at its discretion, fully discharge all obligations with respect to this warranty by refunding the wholesale price of any warranted but defective parts. The manufacturer shall, in no event, be responsible for any uncommon, indirect, consequential damages of any nature, which are in excess of the original purchase price of the product. A one-time replacement limit applies to all parts benefiting from lifetime coverage. This warranty applies to products purchased after March 1st 2019.

DESCRIPTION	WARRANTY APPLICATION*	
	PARTS	LABOUR
Combustion chamber (welds only) and cast iron door frame.	Lifetime	3 years
Surrounds, heat shields, ash drawer, steel legs, pedestal, trims (aluminum extrusions), plating (defective manufacture**), and convector air-mate.	5 years	3 years
Removable stainless steel combustion chamber components, secondary air tubes**, deflectors, and supports.	5 years	N/A
Glass retainers, handle assembly, and air control mechanism.	3 years	1 year
Carbon steel combustion chamber components, vermiculite baffle**, and C-Cast baffle**.	2 years	N/A
Standard blower, heat sensors, switches, rheostat, wiring, and other controls.	1 year	1 year
Optional blower, paint (peeling**), ceramic glass (thermal breakage only**), ceramic fibre blankets, gaskets, insulation, and other options.	1 year	N/A
Firebricks.	N/A	N/A
All parts replaced under the warranty.	90 days	N/A

*Subject to limitations above. **Picture required.

Labour cost and repair work to the account of the manufacturer are based on a predetermined rate schedule and must not exceed the wholesale price of the replacement parts. Shall your unit or a component be defective, contact immediately your DROLET dealer. To accelerate processing of your warranty claim, make sure to have on hand the following information when calling:

- Your name, address and telephone number;
- Bill of sale and dealer's name;
- Installation configuration;
- Serial number and model name as indicated on the nameplate fixed to the back of your unit;
- Nature of the defect and any relevant information.

Before shipping your unit or defective component to our plant, you must obtain an Authorization Number from your DROLET dealer. Any merchandise shipped to our plant without authorization will be refused automatically and returned to the sender.

ENGLISH

This document is available for free download on the manufacturer's website. It is a copyrighted document. Resale is strictly prohibited. The manufacturer may update this document from time to time and cannot be responsible for problems, injuries, or damages arising out of the use of information contained in any document obtained from unauthorized sources.

Stove Builder International inc.
250, rue de Copenhague,
St-Augustin-de-Desmaures (Québec) Canada
G3A 2H3
1-877-356-6663
www.sbi-international.com
tech@sbi-international.com